Readout Mounting Kit

Instructions for general vertical surface mounting

DRO Mounting kit	New Part No. 683663-01	Old Part No. 382260-100
Also used with:	683666-01	382260-103
	683667-01	382260-104

Side Mounting Bracket ...

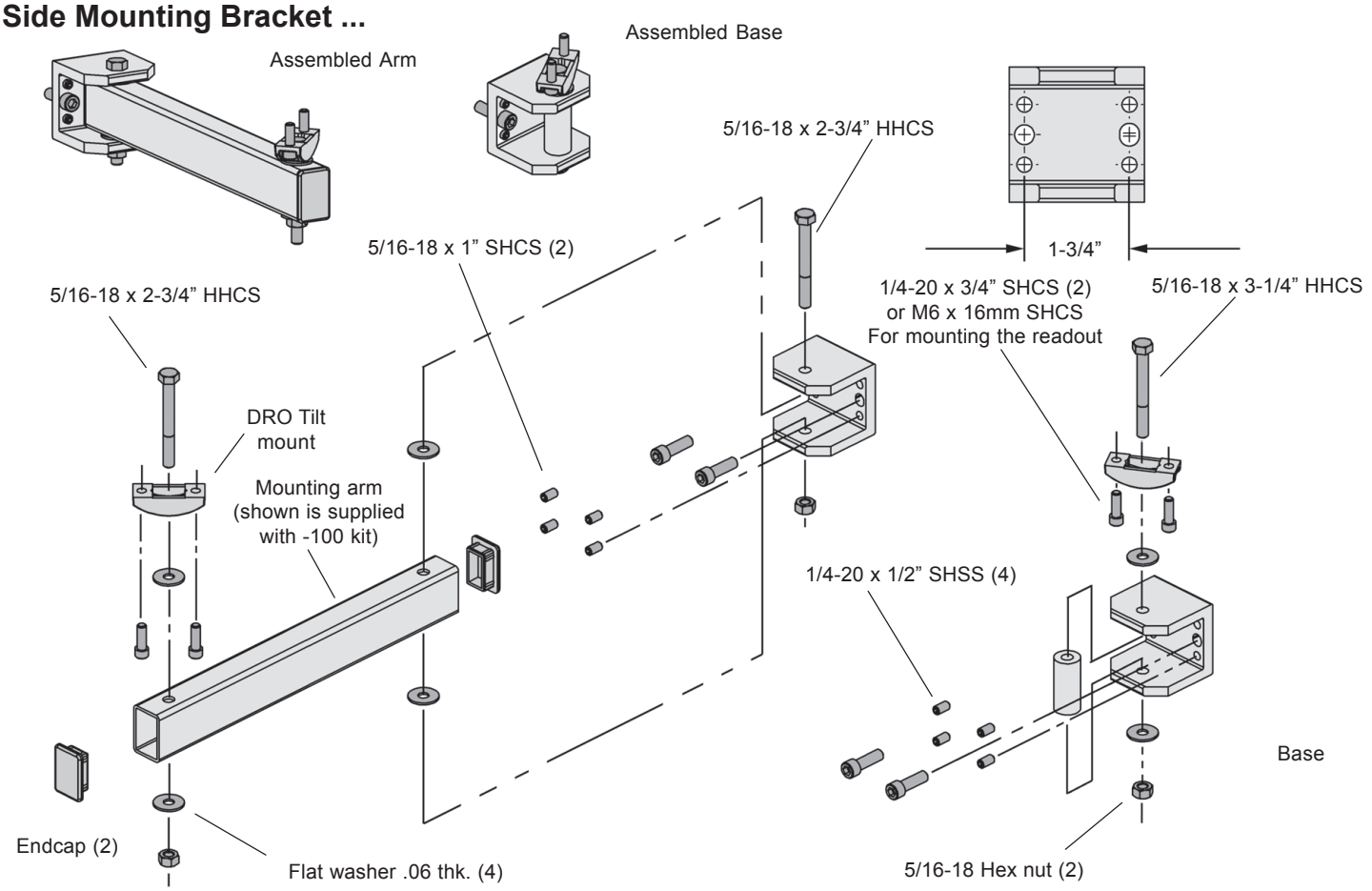

These instructions are for mounting the DRO with the side mounting bracket with or without using the included mounting arm.

Before proceeding:

- ➤ Please read the instructions completely before beginning the installation.
- ➤ Clean the mounting surface.
- ➤ DRO mounting location must not interfere with machine movement or allow the DRO to be damaged during machine operation.

Installation Steps ...

- Attach the arm to the side bracket and hold the assembly to the side of the machine (include the readout if necessary). Mark the bracket location on the machine.
- Disassemble the arm from the bracket. Hold the bracket to it's mounting location and mark one mounting hole to the machine.
- Drill and tap the hole location for 5/16-18 x 5/8" deep.
- Attach the bracket with a 5/16-18 x 1" SHCS. Position the top of the bracket horizontal using a level.
- Transfer punch the second mounting hole location to the machine. Drill and tap the location for 5/16-18 x 5/8" deep. Attach the bracket loosely.
- Insert the (4) 1/4-20 x 1/2" SHSS and assemble the arm to the side bracket. Using a level, position the bracket horizontal, and the arm horizontal with the aid of the leveling screws. Secure assembly in place. Insert end caps at each end of the arm.
- Insert the 5/16-18 x 2-3/4" (or 3-1/4") HHCS into the swivel / tilt bracket and attach the bracket to the readout with (2) 1/4-20 x 3/4" SHCS.
- Attach the readout assembly to the arm or bracket without arm. Tighten the locking nuts to obtain the desired tilt and swivel tension.
- Route the cables along the arm to the back of the readout, cable ties are provided. Secure cables providing sufficient slack loops to allow for machine, arm, and readout movement.

Acu-Rite Companies Inc.
One Precision Way • Jamestown, NY 14701