ACU-RITE

DRO 203
DRO 300

Operating Instructions

Digital Readout

English (en)
10/2018

Contents

1 Fundamentals....13
2 Safety....21
3 Transport and storage....27
4 Mounting....31
5 Installation....37
6 Fundamentals of positioning....45
7 Basic operation....53
8 Commissioning....67
9 Milling specific operations....97
10 Turning specific operations....129
11 Programming....147
12 Measured value output....155
13 External operation....159
14 Operating the IOB 610....163
15 Setting up the IB 2X....191
16 Settings....195
17 Service and maintenance....209
18 What to do if....213
19 Removal and disposal....215
20 Specifications....217

1 Fundamentals 13

1.1 About these instructions 14

1.2 Information on the product 14

1.3 Notes on reading the documentation 15

1.4 Storage and distribution of the documentation 16

1.5 Target group for the instructions 16

1.6 Notes in this documentation 17

1.7 Symbols and fonts used for marking text 19

2 Safety 21

2.1 Overview 22

2.2 General safety precautions 22

2.3 Intended use 22

2.4 Improper use 22

2.5 Personnel qualification 23

2.6 Obligations of the operating company 24

2.7 General safety precautions 24

2.7.1 Symbols in the instructions 24
2.7.2 Symbols on the product 25
2.7.3 Electrical safety instructions 26

3 Transport and storage 27

3.1 Overview 28

3.2 Unpacking 28

3.3 Items supplied and accessories 28

3.4 In case of damage in transit 29

3.5 Repackaging and storage 30

4 Mounting 31
4.1 Overview 32
4.2 Assembly 32
4.3 Mounting on Single-Pos stand 33
4.4 Mounting on Multi-Pos holder 34
4.5 Mounting in a mounting frame 35
4.6 Mounting a cover 36

5 Installation 37
5.1 Overview 38
5.2 General information 38
5.3 Product overview 39
5.4 Connecting an encoder 40
5.5 Connecting an accessory 41
5.6 Connecting a USB device 42
5.7 Connecting the line voltage 42

6 Fundamentals of positioning 45
6.1 Overview 46
6.2 Datums 46
6.3 Actual position, nominal position, and Distance-To-Go 46
6.4 Absolute workpiece positions 47
6.5 Incremental workpiece positions 48
6.6 Zero angle reference axis 49
6.7 Reading head position 50
6.8 Encoder reference marks 51

7 Basic operation 53

7.1 Overview 54

7.2 Front panel and keys 54

7.3 Switch-on/Switch-off 55

7.3.1 Switch-on 55
7.3.2 Switch-off 55

7.4 User interface 56

7.4.1 Display layout 56
7.4.2 Soft keys 57
7.4.3 Graphic positioning aid 58
7.4.4 Operating modes 58
7.4.5 Stopwatch 59
7.4.6 Calculator 59
7.4.7 Help 61
7.4.8 Data input forms 61
7.4.9 Reference mark evaluation 62
7.4.10 Selecting a specific reference mark 64
7.4.11 Error messages 64
7.4.12 Setup menus 64

7.5 User Management 65

7.5.1 Supervisor Login 65
7.5.2 User Job Settings 65

8 Commissioning 67

8.1 Overview 68

8.2 Installation Guide 69

8.3 Installation Setup 70

8.3.1 File management 70
8.3.2 Encoder Setup 76
8.3.3 Display Configuration 78
8.3.4 Readout Settings 79
8.3.5 Diagnostics 80
8.3.6 Display Color Scheme 80
8.3.7 Factory defaults 81
8.3.8 Error Compensation 81
8.3.9 Backlash compensation 86
8.3.10 Spindle settings 86
8.3.11 Switching outputs 86
8.3.12 CSS settings 87

8.4 Job Setup 87

8.4.1 Units 87
8.4.2 Scale Factor 88
8.4.3 Edge Finder 89
8.4.4 Diameter Axes 89
8.4.5 Measured value out 90
8.4.6 Graphic positioning aid 90
8.4.7 Status Bar Settings 91
8.4.8 Stopwatch 91
8.4.9 Skew Compensation for Mill applications 92
8.4.10 Remote Switch 93
8.4.11 DRO View Settings 94
8.4.12 Display Settings 95
8.4.13 System Information 96
8.4.14 Language 96

9 Milling specific operations 97

9.1 Overview 98

9.2 1/2 soft key 98

9.3 Tool Table 99

9.3.1 Soft keys 100
9.3.2 Importing and exporting 100
9.3.3 Tool compensation 100
9.3.4 Entering tool data 102
9.3.5 Selecting a tool 103

9.4 Setting a datum 103

9.4.1 Setting a workpiece datum without using the probing function 104
9.4.2 Probing with a tool 105
9.4.3 Probing with an edge finder 109

9.5 Presetting a target position 113

9.5.1 Absolute distance preset 114
9.5.2 Incremental distance preset 116

9.6 Features 117

9.6.1 Circle and linear patterns 118
9.6.2 Incline and arc milling 123

9.7 Z/W coupling 128

10 Turning specific operations 129

10.1 Overview 130

10.2 Tool display icon 130

10.3 Tool table 130

10.3.1 Importing and exporting 130
10.3.2 Setting tool offsets 130
10.3.3 Selecting a tool 132

10.4 Setting a datum 133

10.4.1 Setting a datum manually 134
10.4.2 Setting a datum using the Lock Axis function 135

10.5 Taper Calculator 135

10.6 Presets 137

10.7 Diameter and radius measurements 138

10.8 Vectoring 139

10.9 Z coupling 140

10.10 Thread Cycle 140

11 Programming 147

11.1 Overview 148

11.2 Creating a new Program 148

11.3 Creating features in a program 149

11.3.1 Creating a Tool step 149
11.3.2 Creating a Datum step 149
11.3.3 Creating a Preset step 149
11.3.4 Creating a Position step 150
11.3.5 Creating a Circle Pattern step 150
11.3.6 Creating a Linear Pattern step 150

11.4 Editing steps 151

11.5 Editing a Program 152

11.6 Opening the graphical view 153

11.7 Running a program 154

12 Measured value output 155

12.1 Overview 156

12.2 Data output using an edge finder 156

13 External operation 159

13.1 External operation 160

14 Operating the IOB 610 163

14.1 Setup 164

14.2 Switching functions 164

14.2.1 Switching inputs 164
14.2.2 Switching Outputs 164

14.3 Spindle Speed control 168

14.3.1 Installation Setup 169
14.3.2 Spindle Speed control settings 171
14.3.3 Spindle Speed control operation 174

14.4 Constant surface speed control 177

14.4.1 Installation Setup 178
14.4.2 CSS control settings 180
14.4.3 CSS operation 182

14.5 DAC output 183

14.5.1 Connecting the IOB to the inverter of a lathe 185

14.6 Diagnostics 187

15 Setting up the IB 2X 191

15.1 Overview 192

15.2 Setup 192

16 Settings....195

16.1 Overview....196

16.2 Factory default settings....196

16.3 Job Setup....196

16.3.1 Units....196
16.3.2 Scale Factor....197
16.3.3 Edge Finder....197
16.3.4 Diameter Axes....197
16.3.5 Measured value out....197
16.3.6 Graphic Pos Aid....197
16.3.7 Status Bar Settings....198
16.3.8 Stopwatch....198
16.3.9 Skew Compensation (milling applications only)....198
16.3.10 Remote Switch....199
16.3.11 DRO View Settings....199
16.3.12 Display Settings....200
16.3.13 Vectoring....200
16.3.14 Language....200

16.4 Installation Setup....201

16.4.1 File Management....201
16.4.2 Encoder Setup....201
16.4.3 Display Configuration....202
16.4.4 Readout Settings....203
16.4.5 Diagnostics....203
16.4.6 Display Color Scheme....203
16.4.7 Factory Defaults....203
16.4.8 Error Compensation....203
16.4.9 Backlash compensation....203
16.4.10 Spindle Settings....204
16.4.11 CSS Settings....206
16.4.12 Switching Outputs....207

17 Service and maintenance....209

17.1 Overview....210

17.2 Cleaning....210

17.3 Maintenance schedule....210

17.4 Resuming operation....211

17.5 Resetting to the factory defaults....211

18 What to do if....213
18.1 Overview....214
18.2 Malfunctions....214
18.3 Troubleshooting....214

19 Removal and disposal....215
19.1 Overview....216
19.2 Removal....216
19.3 Disposal....216

20 Specifications....217
20.1 Product specifications....218
20.2 Product dimensions and mating dimensions....219

1

Fundamentals

1.1 About these instructions

These instructions provide all the information and safety precautions needed for the safe operation of the product.

1.2 Information on the product

Product designation	Part number
DRO 203 3 axes	1197250-xx
DRO 303 3 axes with IOB 610/IB 2X/KT 130 connection	1197251-xx
DRO 304 4 axes with IOB 610/IB 2X/KT 130 connection	1197251-xx

The ID label is provided on the back of the product.

Example:

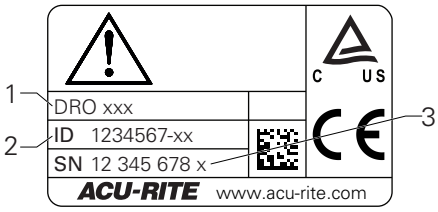

1 Product designation
2 Part number
3 Index

Validity of the documentation

Before using the documentation and the product, you need to verify that the documentation matches the product.

- ▶ Compare the part number and the index indicated in the documentation with the corresponding data given on the ID label of the product
- > If the part numbers and indexes match, the documentation is valid

If the part numbers and indexes do not match so that the documentation is not valid, you will find the current documentation for the product at **www.acu-rite.com**.

1.3 Notes on reading the documentation

The table below lists the components of the documentation in the order of priority for reading.

⚠ WARNING

Fatal accidents, personal injury or property damage caused by non-compliance with the documentation!

Failure to comply with the documentation may result in fatal accidents, personal injury or property damage.

- Read the documentation carefully from beginning to end
- Keep the documentation for future reference

Documentation	Description
Addendum	An addendum supplements or supersedes the corresponding contents of the Operating Instructions and, if applicable, of the Installation Instructions. If this document is included in the shipment, read it first before you proceed. All other contents of the documentation retain their validity.
Installation Instructions	The Installation Instructions contain all the information and safety precautions needed for the proper mounting and installation of the product. They are an excerpt from the Operating Instructions and are included in every shipment. This document has the second highest priority for reading.
Operating Instructions	The Operating Instructions contain all the information and safety precautions needed for the proper operation of the product according to its intended use. This document has the third highest priority for reading. This documentation can be downloaded from the download area at **www.acu-rite.com**. The Operating Instructions must be printed prior to commissioning the product.
Documentation of connected measuring devices and other peripherals	These documents are not included in delivery. They are shipped with the respective measuring devices and peripherals.

Would you like any changes, or have you found any errors?

We are continuously striving to improve our documentation for you. Please help us by sending your requests to the following e-mail address:

userdoc@acu-rite.de

1.4 Storage and distribution of the documentation

The instructions must be kept in the immediate vicinity of the workplace and must be available to all personnel at all times. The operating company must inform the personnel where these instructions are kept. If the instructions have become illegible, the operating company must obtain a replacement from the manufacturer.

If the product is given or resold to any other party, the following documents must be passed on to the new owner:

- Addendum, if supplied
- Installation Instructions
- Operating Instructions

1.5 Target group for the instructions

These instructions must be read and observed by every person who performs any of the following tasks:

- Mounting
- Installation
- Commissioning
- Setup, programming and operation
- Service, cleaning and maintenance
- Troubleshooting
- Removal and disposal

1.6 Notes in this documentation

Safety precautions

Comply with all safety precautions indicated in these instructions and in your machine tool builder's documentation!

Precautionary statements warn of hazards in handling the product and provide information on their prevention. Precautionary statements are classified by hazard severity and divided into the following groups:

⚠ DANGER

Danger indicates hazards for persons. If you do not follow the avoidance instructions, the hazard will **result in death or severe injury.**

⚠ WARNING

Warning indicates hazards for persons. If you do not follow the avoidance instructions, the hazard **could result in death or serious injury.**

⚠ CAUTION

Caution indicates hazards for persons. If you do not follow the avoidance instructions, the hazard **could result in minor or moderate injury.**

NOTICE

Notice indicates danger to material or data. If you do not follow the avoidance instructions, the hazard **could result in things other than personal injury, like property damage**.

Informational notes

Observe the informational notes provided in these instructions to ensure reliable and efficient operation of the product.
In these instructions, you will find the following informational notes:

	The information symbol indicates a **tip**. A tip provides important additional or supplementary information.
	The gear symbol indicates that the function described **depends on the machine,** e.g. ■ Your machine must feature a certain software or hardware option ■ The behavior of the function depends on the configurable machine settings
	The book symbol represents a **cross reference** to external documentation, e.g. the documentation of your machine tool builder or other supplier.

1.7 Symbols and fonts used for marking text

In these instructions the following symbols and fonts are used for marking text:

Format	Meaning
▶ ... > ...	Identifies an action and the result of this action Example: ▶ Press the **enter** key > The parameters are saved and the **Job Setup** menu is displayed
■ ... ■ ...	Identifies an item of a list Example: ■ Installation Setup ■ Job Setup
Bold	Identifies menus, screens, displays, keys, and soft keys Example: ▶ Press the **Setup** soft key > The **Configuration Menu** is displayed.

2

Safety

2.1 Overview

This chapter provides important safety information needed for the proper mounting, installation and operation of the product.

2.2 General safety precautions

General accepted safety precautions, in particular the applicable precautions relating to the handling of live electrical equipment, must be followed when operating the system. Failure to observe these safety precautions may result in personal injury or damage to the product.

It is understood that safety rules within individual companies vary. If a conflict exists between the material contained in these instructions and the rules of a company using this system, the more stringent rules take precedence.

2.3 Intended use

The products of the DRO 203 and DRO 300 series are advanced digital readouts for use on manually operated machine tools. In combination with linear and angle encoders,digital readouts of the DRO 203 and DRO 300 series display the position of the tool in more than one axis and provide further functions for operating the machine tool.

The products of the DRO 203 and DRO 300 series:

- must only be used in commercial applications and in an industrial environment
- must be mounted on a suitable stand or holder to ensure the correct and intended operation of the product
- are intended for indoor use in an environment in which the contamination caused by humidity, dirt, oil and lubricants complies with the requirements of the specifications

The products of the DRO 203 and DRO 300 series support the use of a wide variety of peripheral devices from different manufacturers. HEIDENHAIN cannot make any statements on the intended use of these devices. The information on their intended use, which is provided in the associated documentations, must be observed.

2.4 Improper use

When the product is used it must be ensured that no hazard to persons can result. If any such hazard exists, appropriate measures must be taken by the operating company.

In particular, the product must not be used in the following applications:

- Use and storage outside the specifications
- Outdoor use
- Use in potentially explosive atmospheres
- Use of the product as part of a safety function

2.5 Personnel qualification

The personnel for mounting, installation, operation, service, maintenance and removal must be appropriately qualified for this work and must have obtained sufficient information from the documentation supplied with the product and with the connected peripherals.

The personnel required for the individual activities to be performed on the product are indicated in the respective sections of these instructions.

The personnel groups that are responsible for mounting, installation, operation, maintenance and removal have different qualifications and tasks, which are specified as follows.

Operator

The operator uses and operates the product within the framework specified for the intended use. He is informed by the operating company about the special tasks and the potential hazards resulting from incorrect behavior.

Qualified personnel

The qualified personnel are trained by the operating company to perform advanced operation and parameterization. The qualified personnel have the required technical training, knowledge and experience and know the applicable regulations, and are thus capable of performing the assigned work regarding the application concerned and of proactively identifying and avoiding potential risks.

Electrical specialist

The electrical specialist has the required technical training, knowledge and experience and knows the applicable standards and regulations, and is thus capable of performing work on electrical systems and of proactively identifying and avoiding potential risks. Electrical specialists have been specially trained for the environment they work in.

Electrical specialists must comply with the provisions of the applicable legal regulations on accident prevention.

2.6 Obligations of the operating company

The operating company owns or leases the product and the peripherals. It is responsible that the intended use is complied with at all times.

The operating company must:

- Assign the different tasks to be performed on the product to appropriate, qualified, and authorized personnel
- Verifiably train personnel in the tasks they are allowed to perform and how to perform them
- Provide all materials and means necessary in order for personnel to complete the assigned tasks
- Ensure that the product is operated only when in perfect technical condition
- Ensure that the product is protected from unauthorized use

2.7 General safety precautions

The safety of any system incorporating the use of this product is the responsibility of the assembler or installer of the system.

The product supports the use of a wide variety of peripheral devices from different manufacturers. HEIDENHAIN cannot make any statements on the specific safety precautions to be taken for these devices. The safety precautions provided in the respective documentations must be observed. If no such information has been supplied, it must be obtained from the manufacturers concerned.

The specific safety precautions required for the individual activities to be performed on the product are indicated in the respective sections of these instructions.

2.7.1 Symbols in the instructions

The following safety symbols are used in this manual:

Symbol	Meaning
	Identifies information that warns of personal injury
	Identifies electrostatic sensitive devices (ESD)
	ESD wristband for personal grounding

2.7.2 Symbols on the product

The following symbols are used to identify the product:

Symbol	Meaning
	Observe the safety precautions regarding electricity and power connection before you connect the product
	Earth (ground) terminal as per IEC 60417 - 5017. Observe the information on installation.

2.7.3 Electrical safety instructions

⚠WARNING

Hazard of contact with live parts when opening the product.

This may result in electric shock, burns or death.

- Never open the housing
- Only the manufacturer is permitted to access the inside of the product

⚠WARNING

Hazard of dangerous amount of electricity passing through the human body upon direct or indirect contact with live electrical parts.

This may result in electric shock, burns or death.

- Work on the electrical system and live electrical components is to be performed only by trained specialists
- For power connection and all interface connections, use only cables and connectors that comply with applicable standards
- Have the manufacturer exchange defective electrical components immediately
- Regularly inspect all connected cables and all connections on the product. Defects, such as loose connections or scorched cables, must be removed immediately

NOTICE

Damage to internal parts of the product!

Opening the product will result in forfeiture of warranty and guarantee.

- Never open the housing
- Only the product manufacturer is permitted to access the inside of the product

3

Transport and storage

3.1 Overview

This chapter contains all of the information necessary for the transportation and storage of the product and provides an overview of the items supplied and the available accessories for the product.

3.2 Unpacking

- Open the top lid of the box
- Remove the packaging materials
- Unpack the contents
- Check the delivery for completeness
- Check the delivery for damage

3.3 Items supplied and accessories

Items supplied

The following items are included in the shipment:

- Product
- Power cord (in 1197250-0x, 1197251-0x)
- Installation instructions
- Addendum (optional)
  Further information: "Notes on reading the documentation", Page 15

Accessories

The following items are optionally available and can be ordered from HEIDENHAIN as additional accessories:

Accessories	Part number
Single-Pos stand For rigid mounting, inclination angle 20°	1197273-01
Multi-Pos holder For fastening on an arm, continuously tiltable and swivelable	1197273-02
Mounting frame For mounting to a panel	1197274-01
Cover For protection from dirt and debris	1197275-01
KT 130 edge finder For probing a workpiece (for setting reference points). Compatible with DRO 300 products only.	283273-xx
IOB 610 For switching input and output functions. Compatible with DRO 300 products only.	1197271-01
IB 2X For two additional axes. Compatible with DRO 300 products only.	1197271-02
Y-cable For connecting a KT 130 edge finder and an IOB 610 or IB 2X. Compatible with DRO 300 products only.	1226398-01
Connecting cable For connecting a KT 130 edge finder, an IOB 610, or an IB 2x. Compatible with DRO 300 products only.	1226509-xx

3.4 In case of damage in transit

- Have the shipping agent confirm the damage
- Keep the packaging materials for inspection
- Notify the sender of the damage
- Contact the distributor or machine manufacturer for replacement parts

In case of damage in transit:

- Keep the packaging materials for inspection
- Contact HEIDENHAIN or the machine manufacturer

This applies also if damage occurred to requested replacement parts during transit.

3.5 Repackaging and storage

Repackage and store the product carefully in accordance with the conditions stated below.

Repackaging

Repackaging should correspond to the original packaging as closely as possible.

- Attach all mounting parts and dust protection caps to the product or repackage them in the same way they were originally shipped from the factory.
- Repackage the product such that it is protected from impact and vibration during transit
- Repackage the product such that it is protected from the ingress of dust or humidity
- Place all accessories that were included in the shipment in the original packaging

Further information: "Items supplied and accessories", Page 28

- Include the Addendum (if it was included in the items supplied), the Installation Instructions and the Operating Instructions

Further information: "Storage and distribution of the documentation", Page 16

If you return the product for repair to a service agency:

- Ship the product without accessories, without measuring devices and without peripherals

Storage of the product

- Package the product as described above
- Observe the specified ambient conditions
- Inspect the product for damage after any transport or longer storage times

4

Mounting

4.1 Overview

This chapter contains all of the information necessary for mounting the product.

> The following steps are only to be performed by qualified personnel.
> **Further information:** "Personnel qualification", Page 23

4.2 Assembly

General mounting information

The receptacle for the mounting variants is provided on the rear panel. The connection is compatible with VESA standard 100 mm x 100 mm.

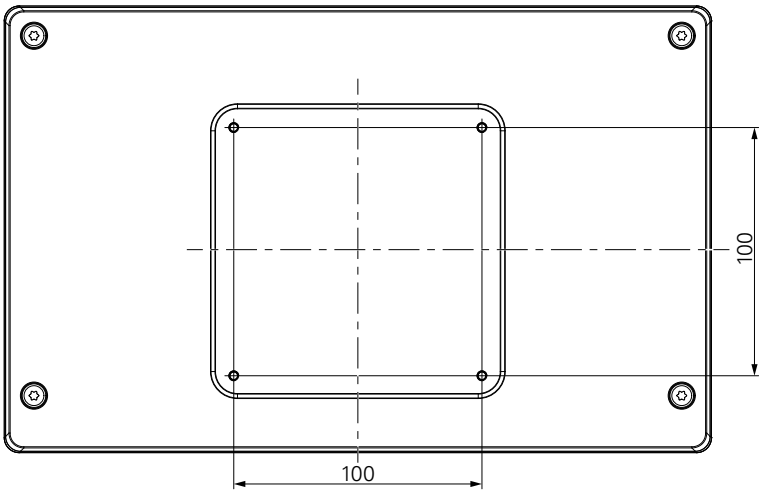

The material for attaching the mounting variants on the device is included in the accessories to the product.

You will also need the following:

- Torx T20 screwdriver
- 2.5 mm allen wrench
- 7 mm socket wrench
- Material for mounting on supporting surface

> The product must be mounted on a stand, a holder, or in a mounting frame to ensure the correct and intended operation of the product.

Routing the cables

> In the figures showing the mounting variants, you will find suggestions for routing the cables after mounting.

When mounting to a mounting variant:

- ▶ Bring the cables together
- ▶ Route the cables laterally to the connections as shown in the illustrations

4.3 Mounting on Single-Pos stand

The Single-Pos stand allows you to place the product on a surface at an inclination angle of 20° and secure the product to a surface.

Mount the stand to the upper VESA 100 tapped holes on the rear panel of the product

- Use a Torx T20 screwdriver to tighten the countersunk head screws M4 x 8 ISO 14581 included in delivery
- Comply with the permissible tightening torque of 2.6 Nm

Secure the product against movement during operation

- Attach the supplied self-adhesive rubber pads to the bottom of the product
- If you do not screw the product to a surface, attach self-adhesive rubber pads to the bottom of the stand

> Attach the rubber pads to the stand only if you do not screw the product to a surface.

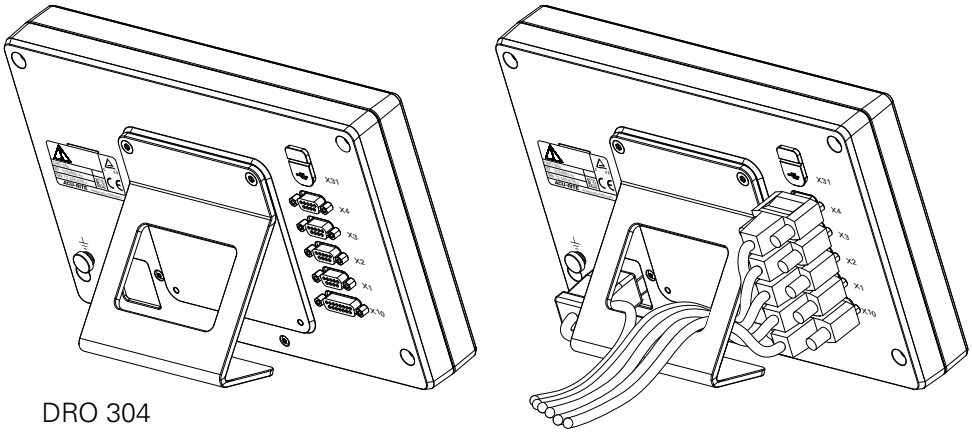

DRO 304

Dimensions of the Single-Pos stand

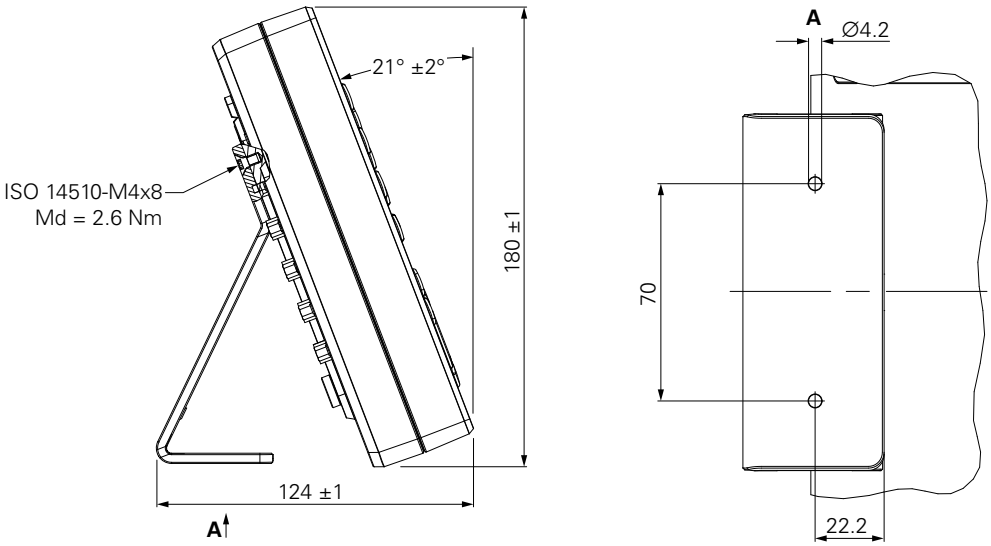

4.4 Mounting on Multi-Pos holder

Mount the holder to the bottom VESA 100 tapped holes on the rear panel of the product

- Use a Torx T20 screwdriver to tighten the countersunk head screws M4 x 10 ISO 14581 (black) included in delivery
- Comply with the permissible tightening torque of 2.5 Nm

You can tilt and swivel the holder to an angle that allows you to comfortably view the readout.

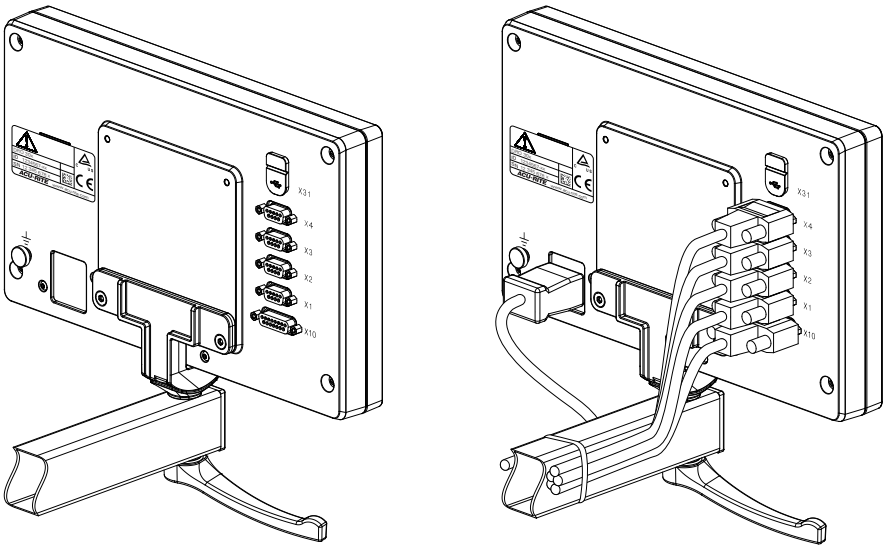

DRO 304

Dimensions of the Multi-Pos holder

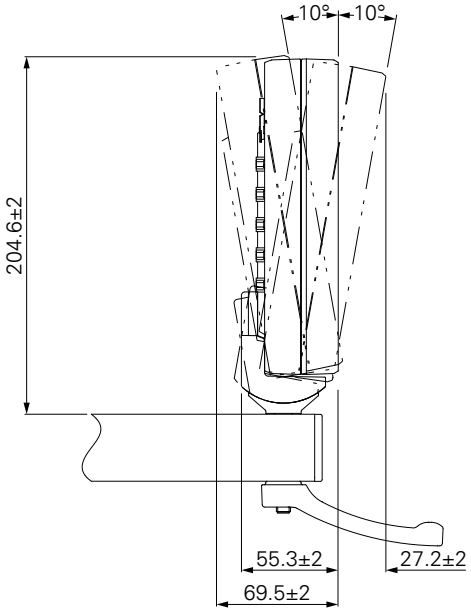

4.5 Mounting in a mounting frame

The mounting frame allows you to mount the product in a panel.

Mount the rear plate of the frame to the VESA 100 tapped holes on the rear panel of the product

- Use a 2.5 mm allen wrench to tighten the screws M4 x 6 ISO 7380 included in delivery
- Comply with the permissible tightening torque of 2.6 Nm

Mount the rear plate and the product to the front plate of the frame

- Use a 7 mm socket wrench to tighten the nuts M4 ISO 10511 included in delivery
- Comply with the permissible tightening torque of 3.5 Nm

Mount the frame and readout in the panel

- Refer to the mounting instructions provided with the mounting frame for panel cutout and mounting information

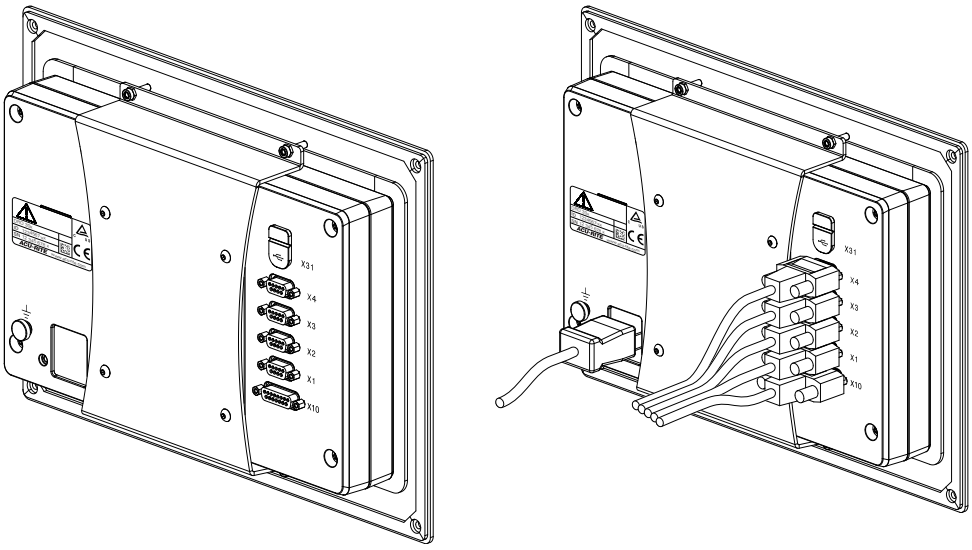

DRO 304

Dimensions of the mounting frame

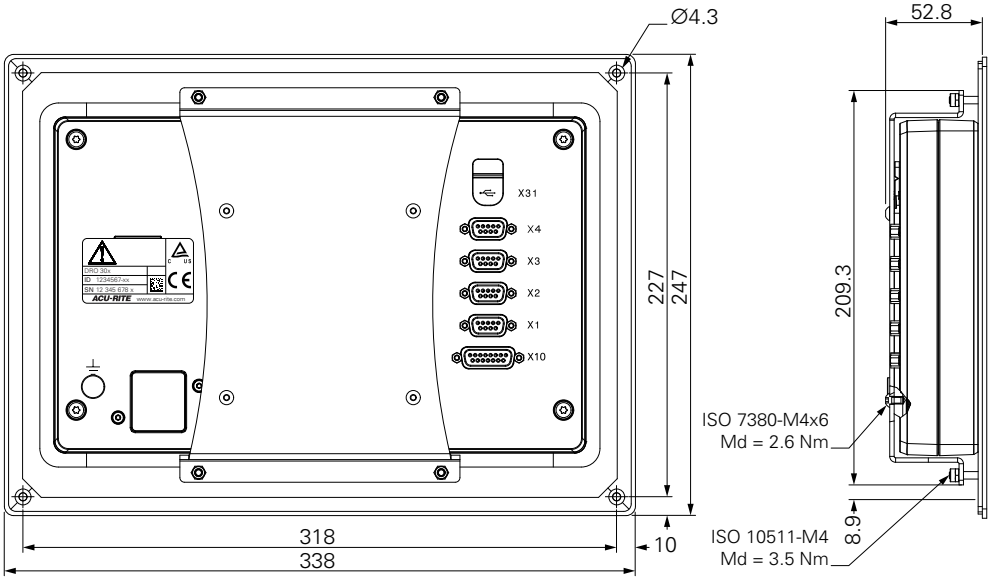

4.6 Mounting a cover

The cover protects the product from dirt and debris.

Place the cover on the product

- Place the cover over the product
- Align the cover and product on the right hand side, when viewing the front of the product

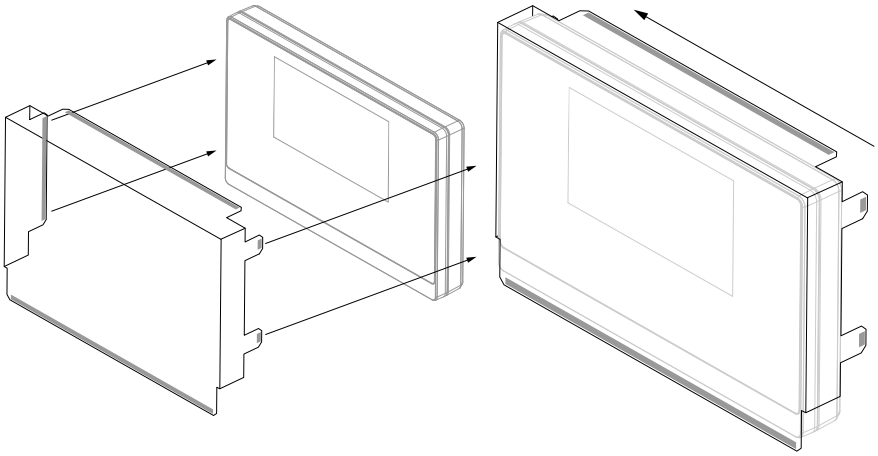

Mount the cover to the product

- Remove the adhesive strip protectors from the adhesive tabs
- Fold the adhesive tabs toward the product
- Press the adhesive tabs against the product securing the tab to the product

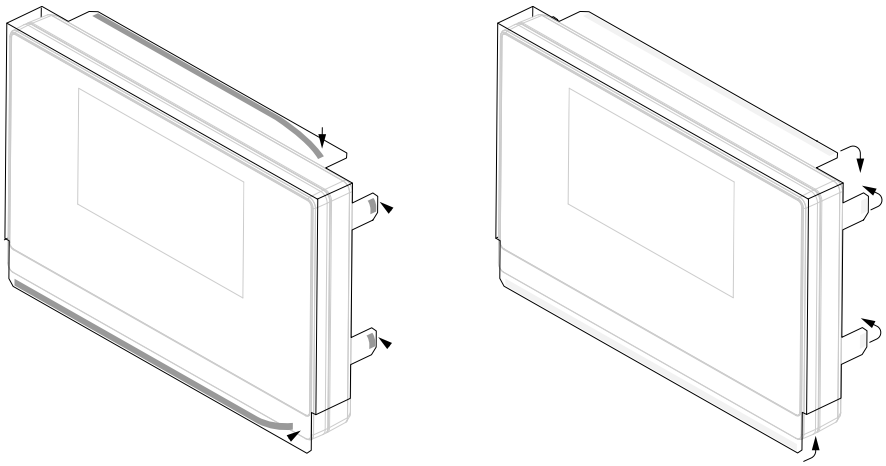

5

Installation

5.1 Overview

This chapter contains all the information necessary for installing the product.

The following steps must be performed only by qualified personnel.

Further information: "Personnel qualification", Page 23

5.2 General information

NOTICE

Engaging and disengaging connecting elements!

Risk of damage to internal components.

- Do not engage or disengage any connecting elements while the unit is under power

NOTICE

Electrostatic discharge (ESD)!

This product contains electrostatic sensitive components that can be destroyed by electrostatic discharge (ESD).

- It is essential to observe the safety precautions for handling ESD-sensitive components
- Never touch connector pins without ensuring proper grounding
- Wear a grounded ESD wristband when handling product connections

NOTICE

Incorrect pin assignment!

This may cause product malfunctions or damage to the product.

- Only assign pins or wires that are used

5.3 Product overview

The connections on the rear panel of the device are protected by dust protection caps from contamination and damage.

NOTICE

Contamination or damage may result if the dust protection caps are missing!

This may impair the proper functioning of the contacts or destroy them.

- Remove dust protection caps only when connecting measuring devices or peripherals
- If you remove a measuring device or peripheral, reattach the dust protection cap to the connection

The type and number of connections may vary depending on the product version.

Rear panel without dust protection caps

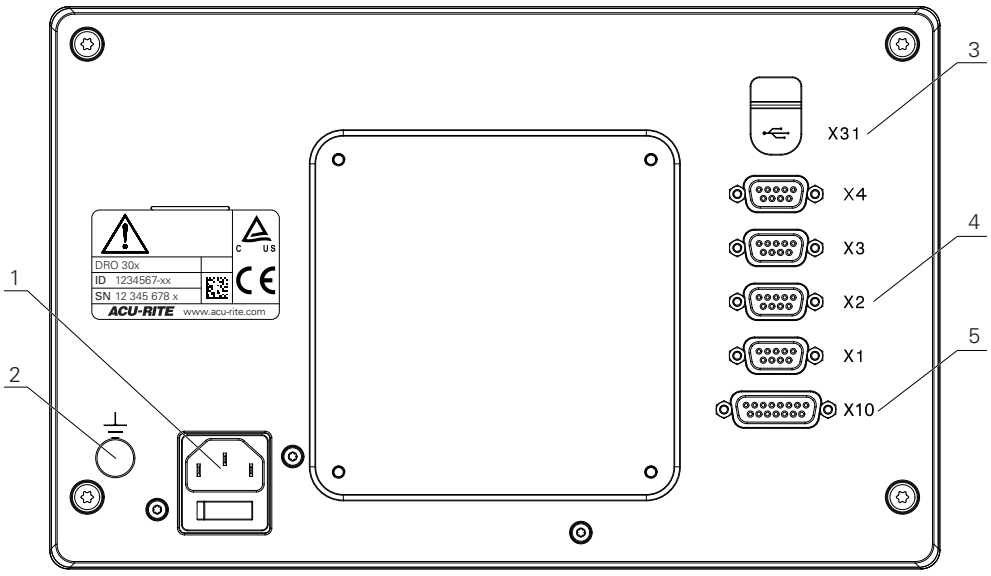

DRO 304

Rear panel

1 Power switch and power connection

2 Earth (ground) terminal as per IEC 60471 - 5017

3 **X31**: USB 2.0 Hi-Speed connection (Type C) for USB mass storage device (beneath protective cover)

4 **X1 to X4**: Device variant with 9-pin D-sub connections for encoders with TTL interface

5 **X10**: 15-pin D-sub connection for touch probes and auxiliary devices (e.g. HEIDENHAIN touch probe, IOB 610, IB 2X). Available on DRO 300 products only.

5.4 Connecting an encoder

- Remove and save the dust protection caps
- Route the cables depending on the mounting variant

Further information: "Assembly", Page 32

- Connect the encoder cable tightly to the respective connection

Further information: "Product overview", Page 39

- If the cable connectors include mounting screws, do not overtighten them

Pin layout of X1 to X4

TTL

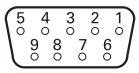

1	2	3	4	5	6	7	8	9
NC	A+	A-	B+	B-	GND	DC 5 V	R-	R+

5.5 Connecting an accessory

The following accessories can be connected to a DRO 300 product:
- HEIDENHAIN KT 130
- ACU-RITE IOB 610
- ACU-RITE IB 2X

Further information: "Accessories", Page 29

A cable is required to connect an accessory to a DRO 300 product.
The following cables are available:
- Y-cable
- Connecting cable

Further information: "Accessories", Page 29

- Remove and save the dust protection caps
- Route the cables depending on the mounting variant

Further information: "Assembly", Page 32

- Connect one end of the Connecting cable tightly to connection X10 and the other end to the accessory
- or

The Y-Cable is for connecting a KT 130 and an IOB 610 or IB 2X to the product. An IOB 610 and IB 2X cannot be connected to the product at the same time.

- Connect the single connector end of the Y-cable tightly to connection X10 and one of the double connector ends to the accessory

Further information: Data sheet provided with the connecting cable or Y-cable

Further information: "Product overview", Page 39

- Do not overtighten the cable connector mounting screws

Pin layout of X10

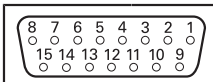

1	2	3	4	5	6	7	8
0 V	Probe ready	Signal low	/	/	DC 5 V	0 V	0 V
9	**10**	**11**	**12**	**13**	**14**	**15**	
Signal high	/	/	Value output contact	Probe input	Value output pulse	0 V	

5.6 Connecting a USB device

- Open the dust protection cap
- Connect the USB device to the respective connection

Further information: "Product overview", Page 39

Pin layout of X31

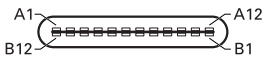

A1	A2	A3	A4	A5	A6	A7	A8	A9	A10	A11	A12
GND	TX1 +	TX1 -	VBUS	CC1	D +	D -	SBU1	VBUS	RX2 -	RX2 +	GND
B1	**B2**	**B3**	**B4**	**B5**	**B6**	**B7**	**B8**	**B9**	**B10**	**B11**	**B12**
GND	TX2 +	TX2 -	VBUS	CC2	D +	D -	SBU2	VBUS	RX1 -	RX1 +	GND

5.7 Connecting the line voltage

⚠WARNING

Risk of electric shock!

Improper grounding of electrical devices may result in serious personal injury or death by electric shock.

- Always use 3-wire power cables
- Make sure the ground wire is correctly connected to the ground of the building's electrical installations

⚠WARNING

Fire hazard from the use of power cables that do not meet the national requirements of the respective country in which the product is mounted.

Improper grounding of electrical devices may result in serious personal injury or death by electric shock.

- Use only a power cable that meets at least the national requirements of the respective country in which the product is mounted

- Use a power cable that meets the requirements to connect the power connection to a 3-wire grounded power outlet

Further information: "Product overview", Page 39

Pin layout of the power connection

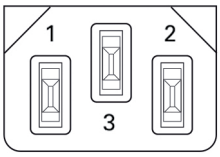

1	2	3
L/N	N/L	⏚

6

Fundamentals of positioning

6.1 Overview

This chapter describes basic positioning information.

6.2 Datums

The workpiece drawing identifies a certain point on the workpiece (example: "a corner") as the absolute datum, and perhaps one, or more other points as relative datums.

The datum setting procedure establishes these points as the origin of the absolute, or relative coordinate systems. The workpiece, which is aligned with the machine axes, is moved to a certain position relative to the tool. The display is set to zero.

6.3 Actual position, nominal position, and Distance-To-Go

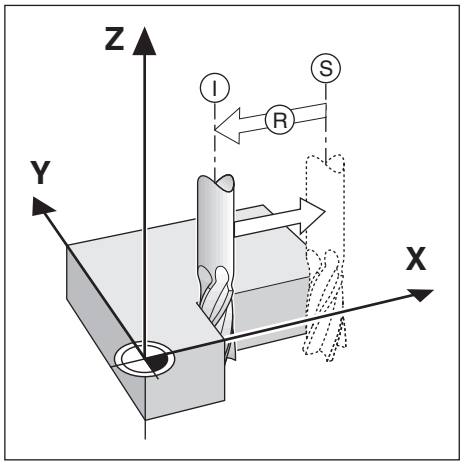

The position of the tool at any given moment is called the Actual Position **I**, while the position that the tool is to move to is called the Nominal Position **S**. The distance from the nominal position to the actual position is called the Distance-To-Go **R**.

6.4 Absolute workpiece positions

Each position on the workpiece is uniquely identified by its absolute coordinates.

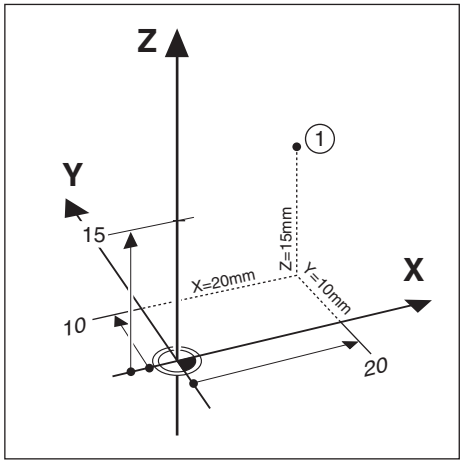

Example: Absolute coordinates of position **1**:
X = 20 mm
Y = 10 mm
Z = 15 mm

If you are drilling, or milling a workpiece according to a workpiece drawing with absolute coordinates, the tool is moving to the value of the coordinates.

6.5 Incremental workpiece positions

A position can also be referenced to the preceding nominal position. In this case the relative datum is always the last nominal position. Such coordinates are referred to as Incremental Coordinates (increment = increase). They are also called incremental, or chain dimensions, since the positions are defined as a chain of dimensions. Incremental coordinates are designated with the prefix **I**.

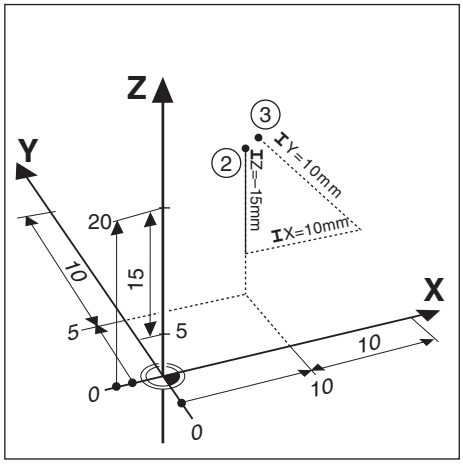

Example: Incremental coordinates of position **3** referenced to position **2**.

Absolute coordinates of position **2**:
X = 10 mm
Y = 5 mm
Z = 20 mm

Incremental coordinates of position **3**:
IX = 10 mm
IY = 10 mm
IZ = 15 mm

If you are drilling, or milling a workpiece according to a drawing with incremental coordinates, you are moving the tool by the value of the coordinates.

6.6 Zero angle reference axis

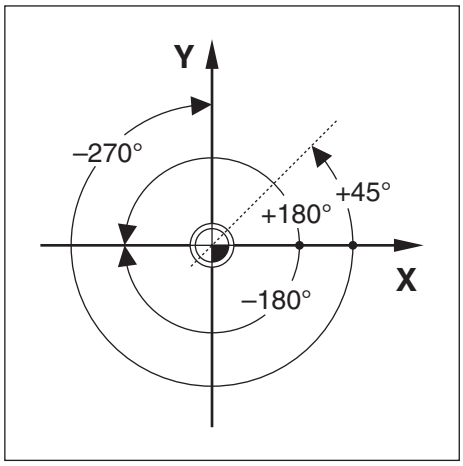

The Zero Angle Reference Axis is the 0.0° position. It is defined as one of the two axes in the plane of rotation. The following table defines the Zero Angle where the position of the angle is zero for the three possible planes of rotation.

For angular positions, the following reference axes are defined:

Plane	Zero Angle Reference Axis
XY	+X
YZ	+Y
ZX	+Z

Positive direction of rotation is counterclockwise if the working plane is viewed in the negative tool axis direction.

Example: Angle in the working plane X / Y

Plane	Zero Angle Reference Axis
+45°	... bisecting line between +X and +Y
+/-180°	... negative X axis
-270°	... positive Y axis

6.7 Reading head position

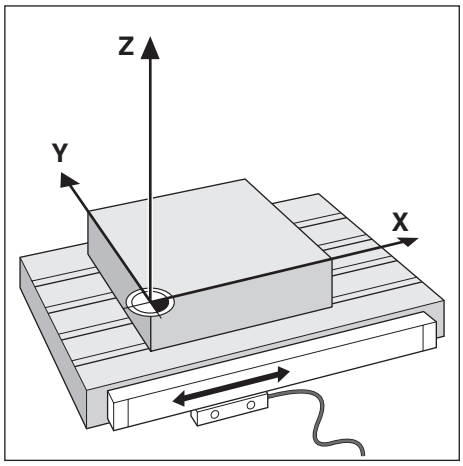

The reading head position provides feedback to the product that converts the movement of the machine axes into electrical signals. The product constantly evaluates these signals, calculates the actual positions of the machine axes, and displays the positions as a numerical value on the display.

If there is an interruption in power, the calculated position will no longer correspond to the actual position. When power is restored, you can re-establish this relationship by using the reference marks on the encoder. This product provides the Reference Mark Evaluation Feature (REF).

6.8 Encoder reference marks

Encoders normally contain one or more reference marks which the Reference Mark Evaluation feature uses to re-establish datum positions after a power interruption. There are two main options available for reference marks:

- Fixed reference marks
- Distance-coded reference marks

Fixed reference marks

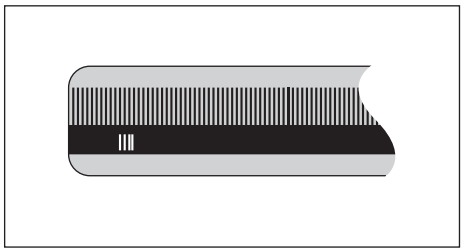

Encoders that have one or more marks on fixed intervals have to re-establish the datums correctly. It is necessary to use the same exact reference mark, during the Reference Mark Evaluation routine, that was used when the datum was first established.

Position Trac (Distance-coded reference marks)

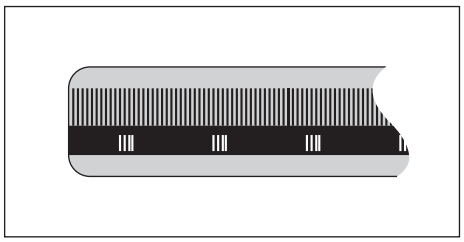

Encoders that have marks separated by a specific encryption pattern allow the product to use any two pair of marks along the length of the encoder to re-establish the prior datums. This configuration means that you only have to travel less than 20 mm anywhere along the encoder to re-establish the datums when the product is switched back on.

The established datums cannot be restored from one power cycle to the next if the reference marks were not crossed before the datums were set.

7

Basic operation

7.1 Overview

This chapter describes the product's operating elements and user interface as well as its basic functions.

7.2 Front panel and keys

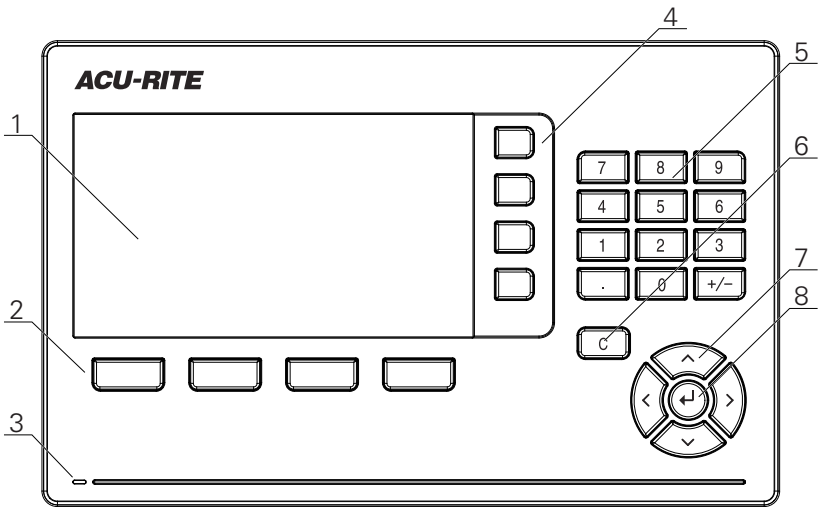

1 Display
2 Soft keys
3 Power indicator LED
4 Axis keys
5 Numeric keys
6 Clear key
7 Arrow keys
8 Enter key

Keys	Function
Axis	Press an **axis** key to **Set** or **Zero** the axis. Refer to the Status Bar for the current **Set/Zero** state.
Soft keys	Soft key labels show milling or turning functions. Press the corresponding soft key directly below each label to select a function.
Numeric	Press a numeric key to enter the corresponding value in a field
Arrow	Press the **arrow** keys to navigate the menus Press the **left** and **right arrow** keys to move through the soft key selectable functions
Enter	Press the **enter** key to confirm a selection and return to the previous screen
C	Press the **C** key to clear entries and error messages, or return back to the previous screen

7.3 Switch-on/Switch-off

7.3.1 Switch-on

> Before using the product, you need to perform the commissioning steps. Depending on the purpose of use, you may have to configure additional setup parameters.
>
> **Further information:** "Commissioning", Page 67

To switch-on the product:

- ▶ Turn the power switch on
  The power switch is on the rear side of the unit
- > The unit powers up. This can take a moment.
- > The first-time configuration screen will appear if this is the first time turning on the product or after resetting factory default settings
- ▶ Press the **Installation Guide** soft key to go to the **Installation Guide**

or

- ▶ Press any key to continue to the display

7.3.2 Switch-off

To switch-off the product:

- ▶ Turn the power switch off
  The power switch is on the rear side of the unit
- > The unit powers down

7.4 User interface

7.4.1 Display layout

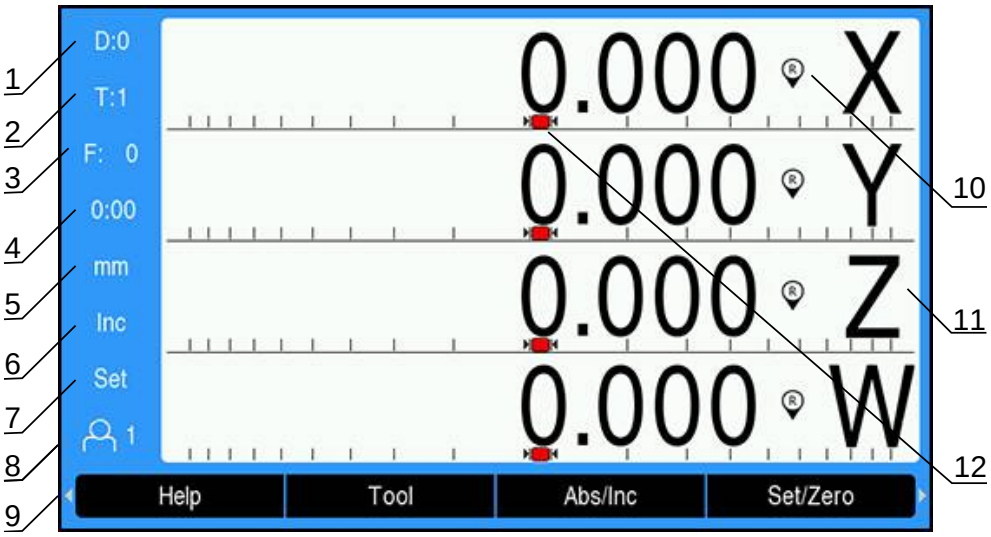

1 Datum
2 Tool
3 Feed rate
4 Stopwatch
5 Unit of measure
6 Operating mode
7 Set/Zero
8 User
9 Soft keys
10 Reference mark indicator
11 Axis labels
12 Graphic positioning aid

Feature	Function
Status bar	Displays the current datum, tool, feed rate, stopwatch time, unit of measure, operating mode status, set/zero setting, and the current user
Display area	Indicates the current position of each axis. Also shows forms, fields, instruction boxes, error messages, and help topics
Axis labels	Indicates axis for corresponding axis key
Reference mark indicator	Indicates current reference mark status Reference marks are established. A flashing indicator represents that reference mark detection is enabled, but the reference marks have not yet been established. Reference marks are not established
Soft keys	Indicate various functions based on the current operating mode or menu
Graphic positioning aid	Indicates the Distance-To-Go

7.4.2 Soft keys

There are multiple pages of soft key functions to select when in one of the operating modes.

To navigate the soft key pages:

- Press the **left** or **right arrow** key to cursor through each page

Soft key	Function
Help	Press the **Help** soft key to open the operating instructions
Tool	Press the **Tool** soft key to open the **Tool Table**
Abs/Inc	Press the **Abs/Inc** soft key to toggle between Actual Value (Absolute) and Distance-To-Go (Incremental) modes
Set/Zero	Press the **Set/Zero** soft key to toggle between Set and Zero functions. Used with individual axis keys.
Datum	Press the **Datum** soft key to open the **Datum** form and set the datum for each axis
Preset	Press the **Preset** soft key to open the **Preset** form. This form is used to set a nominal position. This is a Distance-To-Go (Incremental) function.
1/2	Press the **1/2** soft key to divide the current position by two. Available in **Mill** application only.
Features	Press the **Features** soft key to select the Circle Pattern or Linear Pattern table
Rad/Dia	Press the **Rad/Dia** soft key to toggle between diameter and radius measurements. Available in **Turn** application only.
Setup	Press the **Setup** soft key to access the Configuration menu
Enable Ref	Press the **Enable Ref** soft key when you are ready to identify a reference mark
Calc	Press the **Calc** soft key to open the calculator
inch/mm	Press the **inch/mm** soft key to toggle between inch and millimeter units of measure
Disable Ref	Press the **Disable Ref** soft key when you want to cross over a reference mark and have the system ignore the reference mark
No Ref	Press the **No Ref** soft key to exit the reference mark evaluation routine and work without reference marks
Program	Press the **Program** soft key to select the program Mode

7.4.3 Graphic positioning aid

When positioning to the next nominal position, the product assists you by displaying the Distance-To-Go as well as a graphic positioning aid ("traversing to zero"). A scale is shown underneath each axis you traverse to zero. The graphic positioning aid is a small square that symbolizes the axis slide.

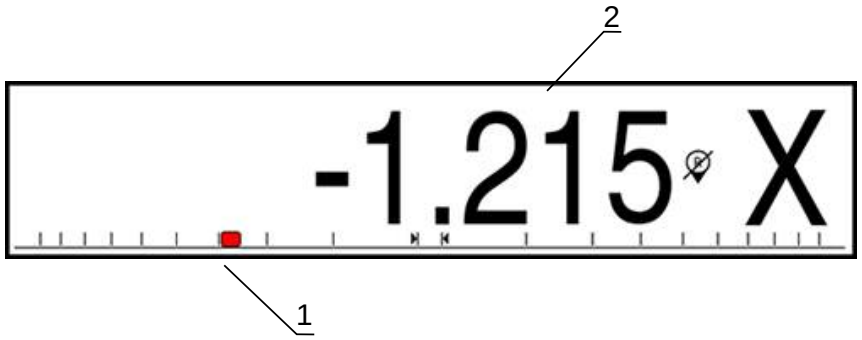

1 Graphic positioning aid (axis slide)
2 Distance-To-Go

The positioning aid moves across the scale when the axis slide is within a range of the nominal position. The default range is ± 5 mm and can be changed in the **Graphic Pos Aid** menu.

Further information: "Graphic positioning aid", Page 90

7.4.4 Operating modes

The product has two operating modes:

- Distance-To-Go (Incremental)
- Actual Value (Absolute)

Distance-To-Go mode (Incremental)

The Distance-To-Go mode enables you to approach nominal positions by zeroing the axes and traversing to a position based on its distance from the zeroed position.

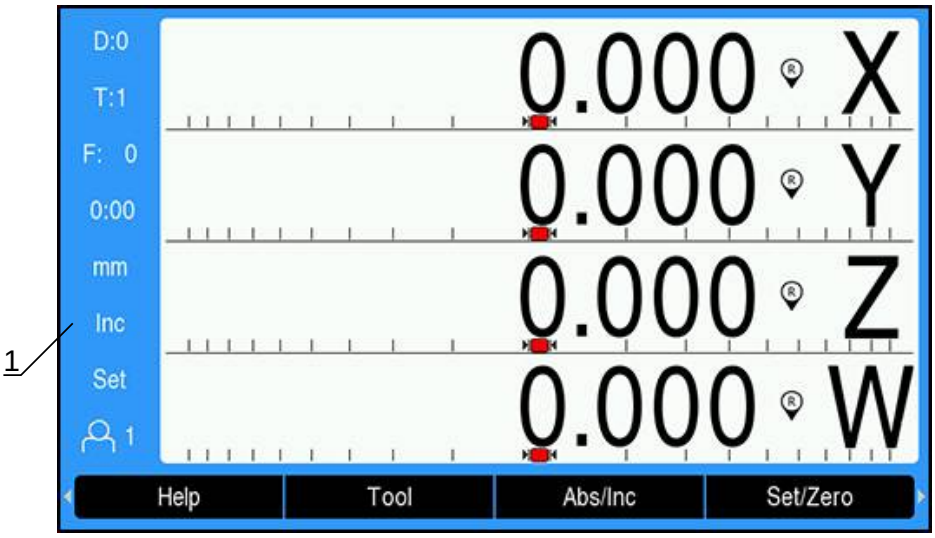

1 Distance-To-Go mode (Inc)

Actual Value mode (Absolute)

The Actual Value mode always displays the current actual position of the tool, relative to the active datum. In this mode, all moves are done by traveling until the display matches the nominal position that is required.

1 Actual Value mode (Abs)

Changing the operating mode

To change the operating mode:

- Press the **Abs/Inc** soft key to toggle between operating modes

7.4.5 Stopwatch

On the DRO screen the **Stopwatch** shows the minutes and seconds until 59:59 is reached, then displays hours and minutes. The **Stopwatch** shows elapsed time. The clock starts timing from 0:00.

The **Stopwatch** can also be operated from the **Job Setup** menu.

Further information: "Stopwatch", Page 91

Starting and stopping the Stopwatch

To start or stop the **Stopwatch**:

- Press the **.** (decimal) key on the numeric key pad to start or stop the **Stopwatch**
- > The elapsed time field in the status bar shows the total accumulated time

Resetting the Stopwatch

To reset the **Stopwatch**:

- Press the **0** (zero) key on the numeric keypad to reset the **Stopwatch** time

7.4.6 Calculator

The **Calculator** is capable of handling everything from simple arithmetic to complex trigonometry and RPM calculations.

Using the Standard/Trig Calculator

To open the **Calculator**:

- Press the **Calc** soft key
- Press the **Standard/Trig** soft key

Trig functions contain all trig operators as well as, square and square root. Whenever you are calculating the SIN, COS, or TAN of an angle, enter the angle first and then press the appropriate soft key.

When you need to enter more than one calculation into a numeric field, the calculator will perform multiplication and division before it performs addition and subtraction.

Ex. If you were to enter 3 + 1 ÷ 8, the calculator will divide one by eight, then add three for an answer of 3.125.

i	Angle values use the current angle format selection of decimal degrees, or radians.

Using the Rpm Calculator

The **Rpm Calculator** is used to determine the **rpm** (or surface cutting speed) based on a specified tool (part, for turning applications) diameter. The values shown are only an example. Consult your tool manufacturer's manual to verify spindle speed ranges per tool.

To use the **Rpm Calculator**:

- Press the **Calc** soft key
- Press the **rpm** soft key to open the **Rpm Calculator** form

The **Rpm Calculator** requires a tool **Diameter** for **Mill** applications. The **Diameter** value will default to the current tool's **Diameter**. If there is no last value entered in this power cycle, the default value is 0.

- Use the numeric key pad to enter a **Diameter** value
- If a **Surface Speed** value is required, enter the value using the numeric key pad

When a **Surface Speed** value is entered, the associated **rpm** value will be calculated.

- Press the **Units** soft key to show the **Units** as inch or mm
- Press the **C** key to close the **Rpm Calculator** and save the current data

7.4.7 Help

Integrated operating instructions provide context-sensitive **Help** when operating the product.

The operating instructions may take a moment to load the first time they are opened:

- After uploading a new operating instructions file
- After changing the user interface language

The message **Loading file. Please wait ...** will display while the operating instructions load.

To open the operating instructions:

- ▶ Press the **Help** soft key
- > The operating instructions will open to the section that covers the current feature or function being used on the product.

The following key functions are available in **Help**:

Key	Function
First axis	Press the **First axis** key to open the table of contents
Up arrow	Press the **Up arrow** key to navigate back in the operating instructions
Down arrow	Press the **Down arrow** key to navigate forward in the operating instructions
Right arrow	Press the **Right arrow** key to highlight the first link on a page If a link is already highlighted: Press the **Right arrow** key to highlight the next link on a page
Left arrow	Press the **Left arrow** key to highlight the last link on a page If a link is already highlighted: Press the **Left arrow** key to highlight the previous link on a page
enter	Press the **enter** key to navigate to a link that is highlighted
C	Press the **C** key to remove a highlight from a link If no links are highlighted: Press the **C** key to exit **Help**

7.4.8 Data input forms

Information required for various operational functions and setup parameters are entered through data input forms. These forms will appear after selecting features that require additional information. Each form provides specific fields for entering the required information.

Confirming changes

To confirm changes:

- ▶ Press the **enter** key to apply the selected parameter changes

Canceling changes

To cancel changes:

- Press the **C** key to return to the previous screen without saving changes

7.4.9 Reference mark evaluation

The Reference Mark Evaluation feature automatically re-establishes the relationship between axis slide positions and display values that was last defined by setting the datum.

The reference mark indicator will flash for each axis with an encoder that has reference marks. The indicator will stop flashing after crossing over the reference marks.

Activating reference marks

1 Reference marks enabled

To activate reference marks:

- Cross over the reference marks for each axis to activate the reference
- > After a successful reference mark evaluation, the indicator will stop flashing

Working without reference marks

The product can also be used without crossing over the reference marks.

1 Reference marks disabled

To work without reference marks:

- ▶ Press the **No Ref** soft key to exit the reference mark evaluation routine, and continue
- > After disabling reference marks the indicator will have a forward slash through it, signifying that the reference marks have been disabled

Re-enabling reference marks

Reference marks can be enabled any time after they have been disabled

To re-enable reference marks:

- ▶ Press the **Enable Ref** soft key to activate the reference mark evaluation routine

i	If an encoder is setup without reference marks the reference indicator will not be displayed. A datum set from the axis will be lost once power is turned off.

7.4.10 Selecting a specific reference mark

The product provides the ability to select a specific reference mark on an encoder. This is important when using encoders with fixed reference marks.

To select a specific reference mark:

- ▶ Press the **Disable Ref** soft key
- > The evaluation routine is paused. Any reference marks that are crossed during encoder movement are ignored.
- ▶ Cross over undesired reference marks
- ▶ Press the **Enable Ref** soft key
- > The next reference mark that is crossed will be selected.
- ▶ Cross the desired reference mark
- ▶ Repeat this process for all desired reference marks
- ▶ Press the **No Ref** soft key to cancel out of routine after all desired axes are established
- > Only the axes that are needed require crossing over the reference marks. If all reference marks have been found the product will return to the DRO display screen automatically.

The product does not store datum points if the reference marks are not crossed. The relationship between axis slide positions and display values will not be re-established after a power interruption or switch-off.

7.4.11 Error messages

If an error occurs while working with the product, a message will appear on the display, and provide an explanation of what caused the error.

Further information: "What to do if...", Page 213

To clear an error message:

- ▶ Press the **C** key
- > The error message will be cleared and normal operation can continue

7.4.12 Setup menus

The product has two menus for setting up operating parameters:

- **Installation Setup**
- **Job Setup**

Installation Setup

The **Installation Setup** menu is used to establish encoder, display, and communication parameters.

Further information: "Installation Setup", Page 70

To access the **Installation Setup** menu:

- ▶ Press the **Setup** soft key
- ▶ Select **Installation Setup**
- > The **Installation Setup** options are displayed

Job Setup

The **Job Setup** menu is used to accommodate specific machining requirements for each job.

Further information: "Job Setup", Page 87

To access the **Job Setup** menu:

- Press the **Setup** soft key
- Select **Job Setup**

> The **Job Setup** options are displayed

7.5 User Management

The **User Management** menu provides a **Supervisor Login** and **User Job Settings** management.

7.5.1 Supervisor Login

The **Supervisor Login** allows you to manage users in the **User Management** menu and to modify configuration parameters in the **Installation Setup** menu.

Further information: "Installation Setup", Page 70

To login as a supervisor:

- Press the **Setup** soft key
- Open in the sequence:
  - **User Management**
  - **Supervisor Login**
- Enter the **Passcode** '8891'
- Press the **enter** key

7.5.2 User Job Settings

When **Job Setup** parameters are configured they are automatically saved under the selected user.

Further information: "Job Setup", Page 87

Selecting a User

To select a **User**:

- Press the **Setup** soft key
- Open in the sequence:
  - **User Management**
  - **User Job Settings**
- Use the **up** and **down arrow** keys to highlight **Load** for the desired **User**
- Press the **enter** key

> The selected **User** is displayed in the status bar

- Press the **C** key twice to return to the DRO screen

Saving User Job Settings

To save **User Job Settings**:

- Select a **User**
- Configure **Job Setup** parameters for the user

Further information: "Job Setup", Page 87

> The **Job Setup** parameters are automatically saved for the selected user.

- Select another **User** and repeat these steps until all of your required users have been setup

Supervisor level User Job Settings

A supervisor can create a default set of **Job Setup** parameters and use the settings to reset user configurations.

Further information: "Supervisor Login", Page 65

Creating a default set of Job Setup parameters

To create default **User Job Settings**:

- Select **User-0**
- Configure **Job Setup** parameters for **User-0**

Further information: "Job Setup", Page 87

> The **Job Setup** parameters are automatically saved for the user

Resetting User Job Settings

To reset an individual **User**:

- Select a **User**
- Press the **right arrow** key to open the drop-down menu
- Press the **down arrow** key to highlight **Reset**
- Press the **enter** key to select **Reset**
- Press the **enter** key to reset the **Job Setup** parameters for the selected user to the **User-0** settings

To reset **All Users**:

- Select **All Users**
- Press the **enter** key to reset the **Job Setup** parameters for all users to the **User-0** settings

8

Commissioning

8.1 Overview

Make sure that you have read and understood the "Basic Operation" chapter before performing the activities described in this section.
Further information: "Basic operation", Page 53

The following steps are only to be performed by qualified personnel.
Further information: "Personnel qualification", Page 23

During the commissioning process the product is configured for use.

Parameters that are changed during the commissioning process can be reset to the factory defaults.

Further information: "Factory defaults", Page 81

Backing up the configuration

Configuration data can be backed up after commissioning. The configuration data can be reused for equivalent products.

Further information: "Configuration parameters", Page 70

8.2 Installation Guide

An **Installation Guide** is provided the first time you switch-on the product. This guide will step you through common commissioning parameters.

Information about specific parameters included in the **Installation Guide** can be found in the Settings section of these instructions.

Further information: "Settings", Page 195

The **Installation Guide** provides configuration options for the following parameters:

- **Language**
- **Readout Settings**
  - **Application**
  - **Number of Axes**
- **Encoder Setup**
  - **Encoder Type**
  - **Encoder Resolution**
  - **Reference Mark**
  - **Count Direction**
  - **Error Monitor**
- **Display Configuration**
  - **Display Resolution**
  - **Label**
- **Display Color Scheme**
  - **Color Mode**

Opening the Installation Guide

To access the **Installation Guide** from the first-time startup screen:

▶ Press the **Installation Guide** soft key

> The **Installation Guide** opens

Navigating the Installation Guide

▶ Press the **right arrow** key to open a parameter drop-down menu

▶ Press the **up** or **down arrow** key to highlight a parameter option

▶ Press the **enter** key to select an option

▶ Press the **Next** soft key to advance to the next parameter

or

▶ Press the **Previous** soft key to go back to a previous parameter

▶ Repeat these steps until all parameters have been set

8.3 Installation Setup

Further information: "Settings", Page 195

> **Installation Setup** parameters must be configured only by qualified personnel.
> **Further information:** "Personnel qualification", Page 23

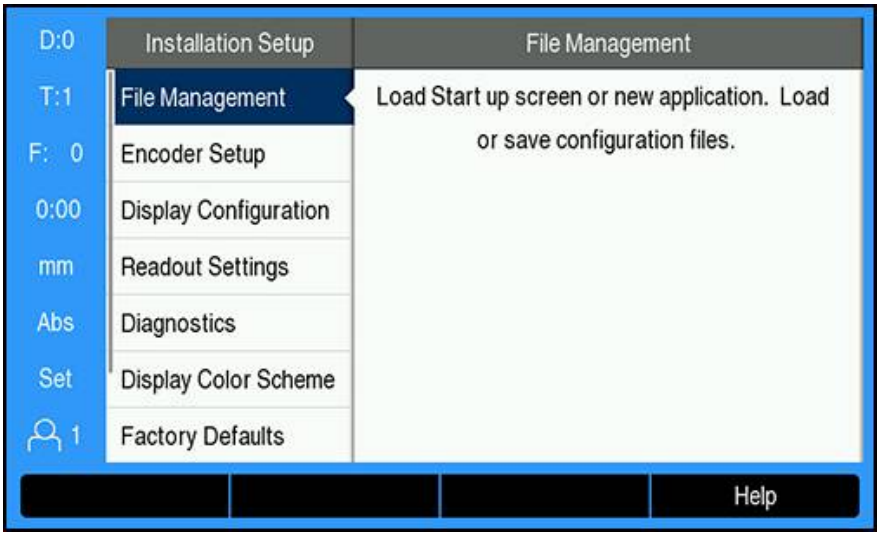

To access the Installation Setup menu:

- ▶ Press the **Setup** soft key
- ▶ Use the **up** or **down arrow** key to highlight **Installation Setup**
- ▶ Press the **right arrow** key
- > The **Installation Setup** menu is displayed

8.3.1 File management

Configuration parameters

The configuration of the product can be backed up as a file to make it available after a reset to the factory default settings or for installation on multiple products. A file with the following properties needs to be stored on the product for this purpose:

- File format: DAT
- File name: config.dat

Importing configuration parameters

To import configuration parameters:

- Insert a USB memory device containing the .dat file into the USB connection
- Press the **Setup** soft key
- Open in the sequence
  - **Installation Setup**
  - **File Management**
  - **Configuration Parameters**
- Press the **Import** soft key
- Press the **enter** key to initiate importing the configuration parameters
- > A pop-up warning informs you that the current parameter settings will be overwritten
- Press the **enter** key to import the configuration parameters and return to the **File Management** menu

or

- Press the **C** key to cancel

Exporting configuration parameters

To export configuration parameters:

- Insert a USB memory device into the USB connection
- Press the **Setup** soft key
- Open in the sequence
  - **Installation Setup**
  - **File Management**
  - **Configuration Parameters**
- Press the **Export** soft key
- Press the **enter** key to initiate exporting the configuration parameters
- > A pop-up warning informs you that the current parameter settings will be exported to the attached USB memory device

> The config.dat file on the USB memory device will be overwritten.

- Press the **enter** key to export the configuration parameters and return to the **File Management** menu

or

- Press the **C** key to cancel

Segmented LEC Table

- File format: DAT
- File name: slec_1.dat (axis 1), slec_2.dat (axis 2), slec_3.dat (axis 3), slec_4.dat (axis 4)

Importing a Segmented LEC Table

To import a **Segmented LEC Table**:

- ▶ Insert a USB memory device containing the .dat file into the USB connection
- ▶ Press the **Setup** soft key
- ▶ Open in the sequence
  - **Installation Setup**
  - **File Management**
  - **Segmented LEC Table**
- ▶ Press the **Import** soft key
- ▶ Press the **enter** key to initiate importing the table
- > A pop-up warning informs you that the current table will be overwritten
- ▶ Press the **enter** key to import the table and return to the **File Management** menu

or

- ▶ Press the **C** key to cancel

Exporting a Segmented LEC Table

To export a **Segmented LEC Table**:

- ▶ Insert a USB memory device into the USB connection
- ▶ Press the **Setup** soft key
- ▶ Open in the sequence
  - **Installation Setup**
  - **File Management**
  - **Segmented LEC Table**
- ▶ Press the **Export** soft key
- ▶ Press the **enter** key to initiate exporting the table
- > A pop-up warning informs you that the current table will be exported to the attached USB memory device
- ▶ Press the **enter** key to export the table and return to the **File Management** menu

or

- ▶ Press the **C** key to cancel

Tool Table

- File format: DAT
- File name: tool_mill.dat (**Mill** application), tool_turn.dat (**Turn** application)

Importing a Tool Table

To import a **Tool Table**:

- Insert a USB memory device containing the .dat file into the USB connection
- Press the **Setup** soft key
- Open in the sequence
  - **Installation Setup**
  - **File Management**
  - **Tool Table**
- Press the **Import** soft key
- Press the **enter** key to initiate importing the table

> A pop-up warning informs you that the current table will be overwritten

- Press the **enter** key to import the table and return to the **File Management** menu

or

- Press the **C** key to cancel

Exporting a Tool Table

To export a **Tool Table**:

- Insert a USB memory device into the USB connection
- Press the **Setup** soft key
- Open in the sequence
  - **Installation Setup**
  - **File Management**
  - **Tool Table**
- Press the **Export** soft key
- Press the **enter** key to initiate exporting the table

> A pop-up warning informs you that the current table will be exported to the attached USB memory device

- Press the **enter** key to export the table and return to the **File Management** menu

or

- Press the **C** key to cancel

Operating Instructions

The product's **Operating Instructions** can be loaded onto the product and viewed using the **Help** function.

Operating Instructions can be loaded to the product in multiple languages. The product will look for the operating instructions in the **Language** selected in the **Job Setup** menu when loading the file from a USB memory device.

> An error will be displayed if the operating instructions are not found on the USB memory device in the selected **Language**.

The **Operating Instructions** can be downloaded from the download area at **www.acu-rite.com**.

A file with the following properties needs to be loaded onto the product:

- File format: mPub
- File name: DRO200_300_xx.mpub[1)]

  [1)] xx: corresponds to the ISO 639-1 two-letter code

To load the **Operating Instructions**:

- ▶ Select the desired **Language** if it is different than the currently selected language

Further information: "Language", Page 96

- ▶ Insert a USB memory device containing the **Operating Instructions** mPub file into the USB connection
- ▶ Press the **Setup** soft key
- ▶ Open in the sequence
  - **Installation Setup**
  - **File Management**
  - **Operating Instructions**
- ▶ Press the **Load** soft key
- ▶ Press the **enter** key to initiate loading the **Operating Instructions**
- > A pop-up warning informs you that the **Operating Instructions** will be loaded
- ▶ Press the **enter** key to load the **Operating Instructions**

or

- ▶ Press the **C** key to cancel

Power-up Screen

You can define an OEM-specific **Power-up Screen**, e.g. the company name or logo, which will be displayed when the product is switched on. An image file with the following properties needs to be stored on the product for this purpose:

- File format: 24-Bit Bitmap
- Image size: 800 x 480 px
- File name: OEM_SplashScreen.bmp

To load a **Power-up Screen**:

- ▶ Connect a USB mass storage device containing the **Power-up Screen** file to the USB port of the product
- ▶ Press the **Setup** soft key
- ▶ Open in the sequence
  - **Installation Setup**
  - **File Management**
  - **Power-up Screen**
- ▶ Press the **Load** soft key
- ▶ Press the **enter** key to initiate loading the **Power-up Screen**
- > A pop-up warning informs you that the **Power-up Screen** will be loaded
- ▶ Press the **enter** key to load the **Power-up Screen** and return to the **File Management** menu

or

- ▶ Press the **C** key to cancel

Product Software

To install a **Product Software** update:

- ▶ Insert a USB memory device containing the **Product Software** file into the USB connection
- ▶ Press the **Setup** soft key
- ▶ Open in the sequence
  - **Installation Setup**
  - **File Management**
  - **Product Software**
- ▶ Press the **Install** soft key
- ▶ Press the **enter** key to initiate installing the software update
- > A pop-up warning informs you that the software update will be installed
- ▶ Press the **enter** key to install the software update
- > The product will restart

or

- ▶ Press the **C** key to cancel

8.3.2 Encoder Setup

Encoder Setup parameters are used to configure each encoder input.

> The adjustment procedure is the same for each axis. The following section describes the configuration of one axis. Repeat the procedure for each axis.

To set up an encoder:

- Press the **Setup** soft key
- Open in the sequence
  - **Installation Setup**
  - **Encoder Setup**
- Select the encoder to set up:
  - **X1**
  - **X2**
  - **X3**
  - **X4**

> The **Encoder Setup** parameters are displayed for the selected axis

- Select the **Encoder Type**:
  - **Linear**
  - **Rotary**
  - **Rotary (Linear)**: a rotary encoder connected to a leadscrew
- Press the **µm/inch** soft key to select the desired **Resolution** unit of measure
  - **µm**
  - **inch**
- Select the desired **Resolution**:

> The **Resolution** can also be established by moving the axis in either direction.

- Press the **enter** key to confirm the selection
- Select the desired **Reference Mark** type:
  - **None**: no reference signal
  - **Single**: single reference mark
  - **Position Trac**: an encoder with the Position-Trac feature
  - **P-Trac (ENC 250)**: an ENC 250 encoder with the Position-Trac feature
  - **EverTrack**: an encoder with the EverTrack feature
  - **LMF**: an LMF encoder with reference marks
- Press the **enter** key to confirm the selection
- Select the desired **Count Direction**:
  - **Negative**
  - **Positive**

  When the encoder's count direction matches the operators count direction, select **Positive**. When they do not match, select **Negative**.

> The **Count Direction** can also be established by moving the axis in the positive direction.

- Press the **enter** key to confirm the selection
- Select **On** or **Off** in the **Error Monitor** parameter to enable or disable monitoring of counting errors
- Press the **enter** key to confirm the selection
- Press the **enter** key to save the **Encoder Setup** parameter changes and return to the **Installation Setup** menu

or

- Press the **C** key to cancel

8.3.3 Display Configuration

Display Configuration parameters are used to configure the way axes information is shown on the display.

> The adjustment procedure is the same for each axis display. The following section describes the configuration of one axis display. Repeat the procedure for each axis display.

To configure an axis display:

- Press the **Setup** soft key
- Open in the sequence
  - **Installation Setup**
  - **Display Configuration**
- Select the axis display to set up:
  - **Display 1**
  - **Display 2**
  - **Display 3**
  - **Display 4**

> The **Display Configuration** parameters are displayed for the selected axis display

- Select the desired **Display Resolution**

Display Resolution options vary based on the encoders connected to the product.

- Press the **enter** key to confirm the selection
- Select a **Label** for the axis display or **Off** to turn off the selected axis display:
  - **Off**
  - **X**
  - **Y**
  - **Z**
  - **U**
  - **V**
  - **W**
  - **A**
  - **B**
  - **C**
  - **S**
- Press the **enter** key to confirm the selection
- Select **Off** or **On** to enable or disable a **Subscript** zero being displayed after the axis label
- Press the **enter** key to confirm the selection
- Select the desired input for the axis display in the **Input 1** parameter:
  - **X1**
  - **X2**
  - **X3**
  - **X4**
- Press the **enter** key to confirm the selection
- Select **+** or **-** in the **Couple Operation** parameter to couple a second input with the first:
  - **+**
  - **-**
  - **Off**
- Press the **enter** key to confirm the selection
- Select the desired input to couple with **Input 1** in the **Input 2** parameter:

- **Not Defined**
- **X1**
- **X2**
- **X3**
- **X4**

▶ Press the **enter** key to confirm the selection

▶ Press the **enter** key to save the **Display Configuration** parameter changes and return to the **Installation Setup** menu

or

▶ Press the **C** key to cancel

8.3.4 Readout Settings

Readout Settings parameters are used to set **Application**, axes, and **Position Recall** requirements.

To configure the readout:

▶ Press the **Setup** soft key

▶ Open in the sequence

- **Installation Setup**
- **Readout Settings**

▶ Select the **Application**

- **Mill**
- **Turn**

▶ Select the **Number of Axes**:

- **1**
- **2**
- **3**
- **4**

▶ Press the **enter** key to confirm the selection

▶ Select **On** or **Off** to enable or disable **Position Recall**

Position Recall will store the last position of each axis when power was turned off, and then redisplay that position once power is turned back on.

> Any movement that occurs while power is off will be lost. Whenever power has been off it is recommended to re-establish workpiece datums using the reference mark evaluation procedure.
>
> **Further information:** "Reference mark evaluation", Page 62

▶ Press the **enter** key to confirm the selection

▶ Press the **enter** key to save the **Readout Settings** parameter changes and return to the **Installation Setup** menu

or

▶ Press the **C** key to cancel

8.3.5 Diagnostics

The **Diagnostics** feature provides a way to test the keypad and display.

- Press the **Setup** soft key
- Open in the sequence
  - **Installation Setup**
  - **Diagnostics**

Keypad Test

An image of the keypad provides an indication when a key is pressed and released.

To test the keypad:

- Press each key to test
- > A key that is operating properly will turn green in the **Diagnostics** screen when pressed on the keypad, and change to gray when released.
- Press the **C** key two times to exit the keypad test

Display Test

To test the display:

- Press the **enter** key to cycle through the available colors

8.3.6 Display Color Scheme

Display Color Scheme parameters are used to set the **Color Mode** of the product. Select the **Color Mode** that makes the display easiest to view in your workspace lighting conditions.

To select a color scheme:

- Press the **Setup** soft key
- Open in the sequence
  - **Installation Setup**
  - **Display Color Scheme**
- Select the **Color Mode**:
  - **Day**: the color scheme is set to **Day** and cannot be selected by the user
  - **Night**: the color scheme is set to **Night** and cannot be selected by the user
  - **User Selectable**: the color mode can be selected by the user from the **Job Setup** menu
- Press the **enter** key to confirm the selection
- Press the **enter** key to save the **Display Color Scheme** parameter changes and return to the **Installation Setup** menu

or

- Press the **C** key to cancel

8.3.7 Factory defaults

Parameter changes made in the **Job Setup** and **Installation Setup** menus can be reset to the factory default settings. All parameters will be reset.

Further information: "Settings", Page 195

To reset parameters to factory default settings:

- Press the **Setup** soft key
- Open in the sequence
  - **Installation Setup**
  - **Factory Defaults**
  - **Reset Settings**
- Press the **Yes/No** soft key and select **Yes**
- Press the **enter** key to initiate resetting the product to the factory default settings

> A warning window will appear to confirm the reset

- Press the **enter** key to reset parameters to the factory default settings

The product will restart.

or

- Press the **C** key to cancel the reset

8.3.8 Error Compensation

The distance a cutting tool travels, measured by an encoder, can in certain cases differ from the actual tool travel. This error can occur due to ball screw pitch error, or deflection and tilting of axes. Errors can be determined with a reference measurement system, such as gauge blocks.

The product provides the ability to compensate for linear errors, and each axis can be programmed separately with the appropriate compensation.

	Error compensation is only available when using linear encoders.

	The adjustment procedure is the same for each axis. The following section describes the configuration of one axis. Repeat the procedure for each axis.

Configuring Linear Error Compensation

Linear Error Compensation (LEC) can be applied, if the results of a comparison with a reference standard show a linear deviation over the whole measuring length. In this case the error can be compensated by the calculation of a single correction factor.

To calculate the correction factor use this formula:

Correction factor **LEC = ((S – M) / M) x 10^6 ppm** with:

S = measured length with a reference standard

M = measured length with device at axis

Example:

If the length of the standard you used is 500 mm, and the measured length along the X-axis is 499.95, then the LEC for the X-axis is 100 parts per million (ppm).

LEC = ((500 – 499.95) / 499.95) x 10^6 ppm = 100 ppm (rounded to the nearest whole number).

To configure LEC:

- Press the **Setup** soft key
- Open in the sequence
  - **Installation Setup**
  - **Error Compensation**
- Select the input to configure:
  - **X1**
  - **X2**
  - **X3**
  - **X4**
- Enter the compensation factor using the numeric keypad
- Repeat these steps for each axis you want to configure
- Press the **enter** key to save the **Error Compensation** parameter changes and return to the **Installation Setup** menu

or

- Press the **C** key to cancel

Configuring LEC automatically

The correction factor may be calculated automatically using a standard gauge block.

To configure LEC automatically:

- Press the **Setup** soft key
- Open in the sequence
  - **Installation Setup**
  - **Error Compensation**
- Select the input to configure:
  - **X1**
  - **X2**
  - **X3**
- Select **Linear** to configure LEC for the input
- Press the **enter** key to confirm the selection
- Press the **Auto Calc** soft key to begin teaching the LEC factor
- Touch one edge of the standard with the tool
- Press the **Teach Edge 1** soft key
- Touch the opposite edge of the standard with the tool
- Press the **Teach Edge 2** soft key
- Enter the length of the standard in the **Actual** field
- Press the **enter** key to confirm the entered value
- Repeat these steps for each axis you want to configure with linear error compensation
- Press the **enter** key to save the **Error Compensation** parameter changes and return to the **Installation Setup** menu

or

- Press the **C** key to cancel

Configuring Segmented LEC

Segmented LEC should be applied if the results of the comparison with a reference standard show an alternating, or oscillating deviation. The required correction values are calculated, and entered in a table. The product supports up to 200 points per axis. The error value between two entered adjacent correction points is calculated with linear interpolation.

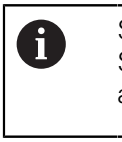

Segmented LEC is only available on scales with reference marks. If Segmented LEC has been defined, no error compensation will be applied until the reference marks have been crossed.

Segmented LEC setup

The encoder has an inherent count direction. This may not reflect the user defined count direction and is only required for determining Segmented LEC.

> Single reference mark encoders must cross the same reference mark each time the product is powered on.

To establish the inherent count direction for any installed encoder on a given axis, complete the following:

- Press the **Setup** soft key
- Open in the sequence
  - **Installation Setup**
  - **Encoder Setup**
- Select the input to configure:
  - **X1**
  - **X2**
  - **X3**
- Select **Count Direction**
- Press the **Positive/Negative** soft key and select **Positive**
- Press the **enter** key to confirm the entered value
- Press the **enter** key to save the parameter changes
- Press the **C** key three times to return to the main display
- Move the axis that the encoder is mounted on and note the direction of movement required for the positive direction

> The encoder's inherent count direction is now established.

Starting a Segmented LEC table

To start a Segmented LEC table:

- Press the **Setup** soft key
- Open in the sequence
  - **Installation Setup**
  - **Error Compensation**
- Select the input to configure:
  - **X1**
  - **X2**
  - **X3**
- Select **Segmented** to configure Segmented LEC for the input
- Press the **enter** key to confirm the selection
- Press the **Create Table** soft key to begin creating the table

All correction points (up to 200) are equally spaced from the start point.

- Enter the **Number of points**
- Press the **down arrow** key
- Enter the **Spacing of Points**
- Press the **down arrow** key

The start point is measured from the encoder's reference point.

If this distance is known:

- Enter the **Start Point** distance

or

If this distance is not known:

- Move to the location of the start point
- Press the **Teach** soft key
- Press the **enter** key to confirm the entered values

> A pop-up warning informs you that creating a new table will clear any existing error points

- Press the **enter** key to save the table and return to the **Error Compensation** menu
- Repeat these steps for each axis you want to create a Segmented LEC table

Configuring a Segmented LEC table

- Press the **Edit Table** soft key to view the table entries
- Press the **up** or **down arrow** keys or the **numeric** keys to move to the correction point to be added or changed
- Press the **right arrow** key
- Enter the known deviation which exists at this point
- Press the **enter** key
- Repeat these steps for each point that requires a correction point
- Press the **enter** key to exit the table and return to the **Error Compensation** menu

8.3.9 Backlash compensation

When using a rotary encoder with a lead screw, a change in direction of the table might cause an error in the displayed position due to clearances within the lead screw assembly. This clearance is referred to as backlash. This error can be compensated for by inputting the amount of backlash within the lead screw into the Backlash Compensation feature.

If the rotary encoder is ahead of the table (displayed value is greater than the table's true position), this is called positive backlash, and the value entered should be the positive value of the amount of error.

No Backlash Compensation is 0.000.

To specify backlash compensation:

- Press the **Setup** soft key
- Open in the sequence
  - **Installation Setup**
  - **Backlash Comp.**
- Select the input to configure:
  - **X1**
  - **X2**
  - **X3**
  - **X4**
- Press the **On/Off** soft key and select **On**
- Enter the backlash compensation value
- Repeat these steps for all axes that require backlash compensation
- Press the **enter** key to save the backlash compensation values and return to the **Installation Setup** menu

or

- Press the **C** key to cancel

8.3.10 Spindle settings

This feature is available on DRO 300 products only.

Spindle Settings options are available when an IOB 610 is connected to a DRO 300 product. Refer to the IOB 610 operation section for configuration information.

Further information: "Spindle Speed control", Page 168

8.3.11 Switching outputs

This feature is available on DRO 300 products only.

Switching Outputs options are available when an IOB 610 is connected to a DRO 300 product. Refer to the IOB 610 operation section for configuration information.

Further information: "Output settings", Page 165

8.3.12 CSS settings

This feature is available on DRO 300 products only.

CSS Settings options are available when an IOB 610 is connected to a DRO 300 product. Refer to the IOB 610 operation section for configuration information.

Further information: "CSS control settings", Page 180

8.4 Job Setup

The **Job Setup** menu is used to establish specific machining requirements for each job.

8.4.1 Units

Units parameters are used to specify the preferred display units and format. You can also select the unit of measure by pressing the **inch/mm** key in either operating mode.

To set the unit of measure:

- Press the **Setup** soft key
- Open in the sequence
  - **Job Setup**
  - **Units**
- Select the **Linear** units of measure:
  - **inch**
  - **mm**
- Press the **enter** key to confirm the selection
- Select the **Angular** units of measure:
  - **Decimal Degrees**
  - **Radians**
  - **DMS**: Degrees, Minutes, Seconds
- Press the **enter** key to confirm the selection
- Press the **enter** key to save the **Units** parameter changes and return to the **Job Setup** menu

or

- Press the **C** key to cancel

8.4.2 Scale Factor

Scale Factor is used to scale a part up or down. A scale factor of 1.0 creates a part with the exact size as dimensioned on a print. A scale factor >1 “grows” the part, and <1 “shrinks” the part.

	The **Scale Factor** setting range is ±0.100 to 100.000

Settings are retained on a power cycle.

When the **Scale Factor** is a value other than 1, the scaling symbol is shown on the axis display.

To set a **Scale Factor**:

- Press the **Setup** soft key
- Open in the sequence
  - **Job Setup**
  - **Scale Factor**
- Select the axis to configure
- Press the **On/Off** soft key and select **On**
- Enter the **Scale Factor** value
- Repeat these steps for all axes that require a **Scale Factor**
- Press the **enter** key to save the values and return to the **Job Setup** menu

or

- Press the **C** key to cancel

Mirroring a part

A **Scale Factor** of -1.00 will produce a mirror image of the part. You can both mirror and scale a part at the same time.

8.4.3 Edge Finder

This feature is available on DRO 300 products only.

Edge Finder parameters are used to setup the KT-130 edge finder.

Diameter and **Length Offset** values are in the **Units** selected in the form.

To set up an **Edge Finder**:

- Press the **Setup** soft key
- Open in the sequence
  - **Job Setup**
  - **Edge Finder**
- Enter the **Diameter** using the numeric keypad
- Enter the **Length Offset** using the numeric keypad
- Select the **Units**:
  - **inch**
  - **mm**
- Press the **enter** key to confirm the selection
- Press the **enter** key to save the **Edge Finder** parameter changes and return to the **Job Setup** menu

or

- Press the **C** key to cancel

8.4.4 Diameter Axes

Diameter Axes parameters are used to set which axes can display radius or diameter values.

To setup the display of radius or diameter values:

- Press the **Setup** soft key
- Open in the sequence
  - **Job Setup**
  - **Diameter Axes**
- Select the desired axis to setup
- Press the **On/Off** soft key and select **On** to enable the display of radius or diameter values for the selected axis
- Repeat these steps for each axis to enable
- Press the **enter** key to save the **Diameter Axes** parameter changes and return to the **Job Setup** menu

or

- Press the **C** key to cancel

8.4.5 Measured value out.

> This feature is available on DRO 300 products only.

Measured value out. is used to enable data output during probing operations.

When **Data Output Probing** is enabled, measurement data is output when a probe operation is completed. Probe measurement values, while doing probe operations within the set datum function, can be sent over the USB port to a USB mass storage device.

To enable **Measured value out.**:

- Press the **Setup** soft key
- Open in the sequence
  - **Job Setup**
  - **Measured value out.**
- Press the **On/Off** soft key to enable **Data Output Probing**
- Press the **enter** key to save the **Measured value out.** parameter changes and return to the **Job Setup** menu

or

- Press the **C** key to cancel

8.4.6 Graphic positioning aid

Graphic positioning aids are displayed below each axis in Distance-To-Go (Inc) mode. Each axis has its own range that can be set.

Further information: "Graphic positioning aid", Page 58

To configure graphic positioning aid settings:

- Press the **Setup** soft key
- Open in the sequence
  - **Job Setup**
  - **Graphic Pos Aid**
- Select the desired axis to setup

The default range setting is 5.000 mm.

- Press the **On/Off** soft key to select **On** and use the default range setting

or

- Enter a range setting using the numeric keypad
- Repeat the process for each axis you would like to set
- Press the **enter** key to save the **Graphic Pos Aid** parameter changes and return to the **Job Setup** menu

or

- Press the **C** key to cancel

8.4.7 Status Bar Settings

The Status Bar is the segmented bar at the side of the display that shows the current **Datum**, **Tool**, **Feed Rate**, **Stopwatch** time, **Units**, operating mode status, **Set/Zero** setting, and the **Current User**.

To configure the status bar settings:

- Press the **Setup** soft key
- Open in the sequence
  - **Job Setup**
  - **Status Bar Settings**
- Select a parameter
- Press the **On/Off** soft key to enable or disable the selected option from being displayed in the status bar
- Repeat for each option you would like to enable or disable
- Press the **enter** key to save the **Status Bar Settings** parameter changes and return to the **Job Setup** menu

or

- Press the **C** key to cancel

8.4.8 Stopwatch

The **Stopwatch** shows the hours, minutes, and seconds elapsed time. The clock starts timing from 00:00:00.

The **Stopwatch** can also be operated in the DRO screen using the numeric keypad.

Further information: "Stopwatch", Page 59

Accessing the Stopwatch controls

To access the controls:

- Press the **Setup** soft key
- Open in the sequence
  - **Job Setup**
  - **Stopwatch**

Starting and stopping the Stopwatch

To start or stop the **Stopwatch**:

- Press the **Start/Stop** soft key to start or stop the **Stopwatch**
- > The **Elapsed Time** field shows the total accumulated time

Resetting the stopwatch

To reset the **Stopwatch**:

- Press the **Reset** soft key to reset the stopwatch time

8.4.9 Skew Compensation for Mill applications

> This feature is available on DRO 300 products only.

Skew Compensation allows you to drill holes on a workpiece without aligning the workpiece on the machine. Use this feature only for drilling holes.

When skew compensation is activated, the skew icon **S** is displayed on the right side of the axis display.

To configure **Skew Compensation**:

- Press the **Setup** soft key
- Open in the sequence
  - **Job Setup**
  - **Skew Compensation**
- Press the **On/Off** soft key to enable **Skew Compensation**
- Highlight the **Angle** field
- Enter the skew angle using the numeric keypad if it is known

or

> The skew angle is learned by touching off two points along one side. When using the edge finder, the location of the edge is captured automatically.

- Touch a point on an edge with an edge finder, or touch a point and press the **Teach** soft key if probing with a tool
- Touch a second point on the same edge with an edge finder, or touch a second point and press the **Teach** soft key if probing with a tool

8.4.10 Remote Switch

This feature is available on DRO 300 products only.

The remote switch sets the parameters so the external switch (pendant, or foot switch) can be enabled to perform any or all of the following functions:

- **Data Output**: send position information over the USB port to a USB mass storage device when the switch is closed
- **Zero**: zero an axis when the switch is closed
- **Next**: advance to the next hole in a hole pattern or next step in a program when the switch is closed

To setup the **Remote Switch**:

- Press the **Setup** soft key
- Open in the sequence
  - **Job Setup**
  - **Remote Switch**
- Press the **On/Off** soft key and select **On**, to enable **Data Output**
- Highlight the **Zero** field
- Press an axis key to enable zeroing of the axis when the switch is closed. More than one axis can be selected.
- Highlight the **Next** field
- Press the **On/Off** soft key and select **On**, to enable advancing to the next hole in a hole pattern or next step in a program when the switch is closed
- Press the **enter** key to save the **Remote Switch** parameter changes and return to the **Job Setup** menu

or

- Press the **C** key to cancel

8.4.11 DRO View Settings

This feature is available on DRO 300 products only.

The product has the ability to define up to three DRO display configurations (views). Each view defines which axes displays appear on the screen when the view is selected.

With three views available, one may be set to all available axes, and the others may be a subset of the axes.

Axis keys correspond to the axes being displayed in the current DRO view. If only two axes are being displayed, and there are more axis keys (3 or 4), then only the top two keys will function. Unmatched keys are ignored.

When two or more DRO views are configured, the DRO mode includes a **View** soft key which is used to toggle between **DRO 1**, **DRO 2**, and **DRO 3** views. The current view is indicated on the soft key.

Multiple DRO views are only available when the full screen DRO is displayed. In screens where the small DRO is displayed, all axes positions are displayed and multiple DRO views are not available.

When running a program or a single cycle pattern, the large DRO uses the current DRO view that is selected. The view with the graphic and small DRO will show all available axes.

To setup the **DRO View Settings**:

- Press the **Setup** soft key
- Open in the sequence
  - **Job Setup**
  - **DRO View Settings**
- Highlight the **DRO** view field you would like to configure
  - **DRO 1**
  - **DRO 2**
  - **DRO 3**
- Press an axis key to add the axis to the selected view. If an axis key is pressed for an axis that is already included, the axis will be removed.
- Repeat the last two steps for all views you would like to configure
- Press the **enter** key to save the **DRO View Settings** parameter changes and return to the **Job Setup** menu

or

- Press the **C** key to cancel

8.4.12 Display Settings

Display Settings parameters are used to adjust the appearance of the display.

To configure **Display Settings**:

- Press the **Setup** soft key
- Open in the sequence
  - **Job Setup**
  - **Display Settings**
- Use the **left** or **right arrow** key to adjust the **Brightness** level of the display

The display brightness can also be adjusted using the **up** and **down arrow** keys when the product is in either operating mode.

- Select the time in minutes that the display is idle before the **Display Saver (min)** is activated and the display is switched off:
  - **Off**
  - **10**
  - **30**
- Press the **enter** key to confirm the selection
- Press the **Day/Night** soft key to select the desired **Color Mode**:
  - **Night**
  - **Day**
- Select how the axis that is in motion is displayed:
  - **Normal**: All axes are displayed normal
  - **Dynamic Zoom**: The axis in motion is displayed larger than axes not in motion
  - **Highlight**: In **Day** mode axes in motion are displayed in black, axes not in motion are displayed in gray. In **Night** mode axes in motion are displayed in white, axes not in motion are displayed in gray.

  > If **Dynamic Zoom** or **Highlight** is selected, the feature can be toggled on and off from the DRO screen.
  >
  > To toggle the feature:
  >
  > - Press the **+/-** key

- Press the **enter** key to confirm the selection
- Press the **enter** key to save the **Display Settings** parameter changes and return to the **Job Setup** menu

or

- Press the **C** key to cancel

8.4.13 System Information

The **System Information** screen provides product and software information.

Available information:

- **Product Name**
- **Product ID**
- **Serial Number**
- **Software Version**
- **Bootloader Version**
- **FPGA Version**
- **Board ID**

To access **System Information**:

- ▶ Press the **Setup** soft key
- ▶ Open in the sequence
  - **Job Setup**
  - **System Information**
- ▶ Press the **enter** key
- > The **System Information** screen is displayed
- ▶ Press the **C** key to exit **System Information**

8.4.14 Language

The **Language** parameter is used to select the language for the user interface. The default language is English.

To change the Language:

- ▶ Press the **Setup** soft key
- ▶ Open in the sequence
  - **Job Setup**
  - **Language**
- ▶ Select the desired language
- ▶ Press the **enter** key to confirm the selection
- ▶ Press the **enter** key to save the **Language** parameter change and return to the **Job Setup** menu

or

- ▶ Press the **C** key to cancel

9

Milling specific operations

9.1 Overview

This chapter describes operations and soft key functions specific to milling applications.

Make sure that you have read and understood the "Basic Operation" chapter before performing the activities described in this section.

Further information: "Basic operation", Page 53

9.2 1/2 soft key

The **1/2** soft key is available when the product is setup for milling applications and is used to find the centerline (or midpoint) between two locations along a selected axis of a workpiece. This can be performed in either Actual Value or Distance-To-Go mode.

This feature will change datum locations when in Actual Value mode.

Example: Finding the midpoint along a selected axis

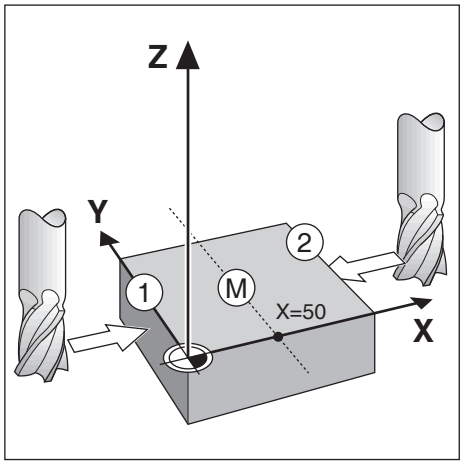

X dimension: X = 100 mm

Midpoint: 50 mm

To find the midpoint:

- Move the tool to the first point

The **Set/Zero** soft key must be set to **Zero**.

- Press the **X axis** key
- Move to the second point
- Press the **1/2** soft key
- Press the **X axis** key
- Move the tool until zero is reached

> This is the midpoint location

9.3 Tool Table

The **Tool Table** is used to store diameter and length offset information for tools.
The DRO 203 **Tool Table** can store information for up to 16 tools.
The DRO 300 **Tool Table** can store information for up to 100 tools.

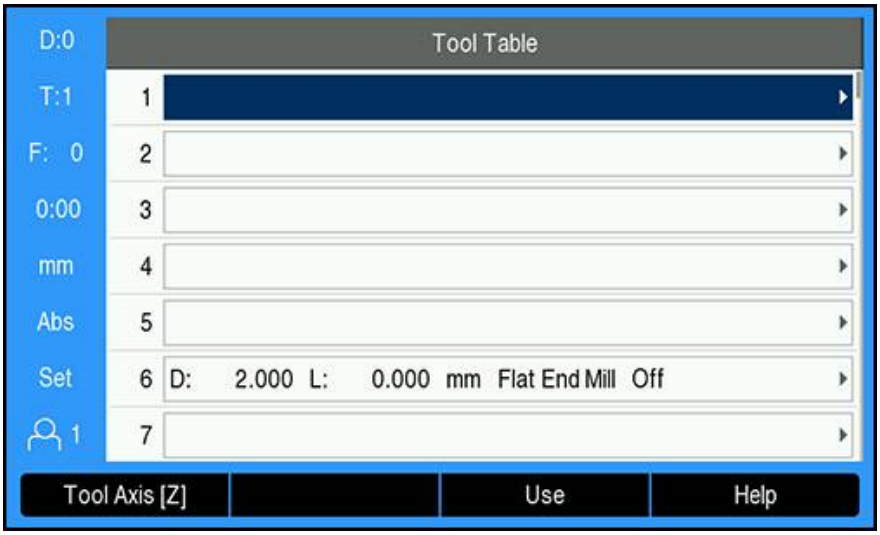

Opening the Tool Table

To open the **Tool Table**:

- Press the **Tool** soft key

Selecting a Tool

To select a **Tool**:

- Use the **up** or **down arrow** key to highlight a tool

or

- Enter the tool number using the numeric key pad
- Press the **right arrow** key

or

- Press the **enter** key

> The tool form for the selected tool is displayed

9.3.1 Soft keys

The following soft keys are available in the **Tool Table** form or in the individual tool data form:

Soft key	Function
Tool Axis	Press the **Tool Axis** soft key to toggle and select which axis the tool length offsets will affect. The tool's diameter values will subsequently be used to offset the remaining two axes.
Teach	Press the **Teach** soft key to automatically enter the tool offset length. This key is only available in the **Length** field.
Clear	Press the **Clear** soft key to remove a tool from the table
Use	Press the **Use** soft key to select the highlighted tool from the table
Help	Press the **Help** soft key to access **Tool Table** specific help

9.3.2 Importing and exporting

A **Tool Table** can be imported from an existing file or exported for backup and future use.

Further information: "Tool Table", Page 72

9.3.3 Tool compensation

Tool compensation allows you to enter workpiece dimensions directly from the drawing.

Radius compensation

Tool radius compensation is calculated based on the value entered in the **Diameter** field in the **Tool** form.

R represents the tool radius. The displayed distance-to-go is automatically lengthened **R+**, or shortened **R-** by the value of the tool radius.

Further information: "Presetting a target position", Page 113

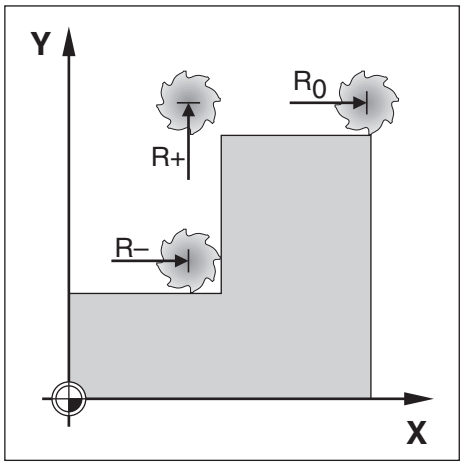

Length offset

Tool length offset is calculated based on the value entered into the **Length** field in the **Tool** form. The length offset can be entered as a known value or the product can teach the offset.

Further information: "Entering tool data", Page 102

The tool length is the difference in length ΔL between the tool and the reference tool. The length difference is indicated with the "Δ" symbol. The reference tool is indicated by T1.

- If the tool is **longer** than the reference tool: ΔL > 0 (+)
- If the tool is **shorter** than the reference tool:ΔL < 0 (–)

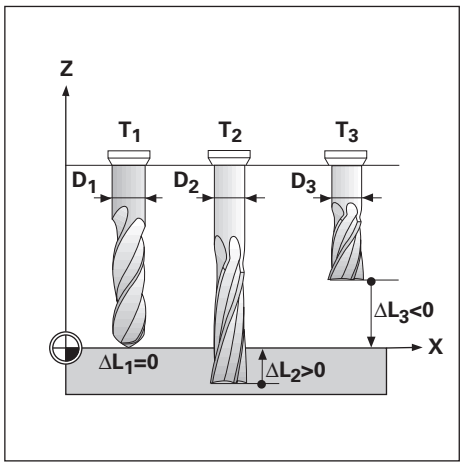

9.3.4 Entering tool data

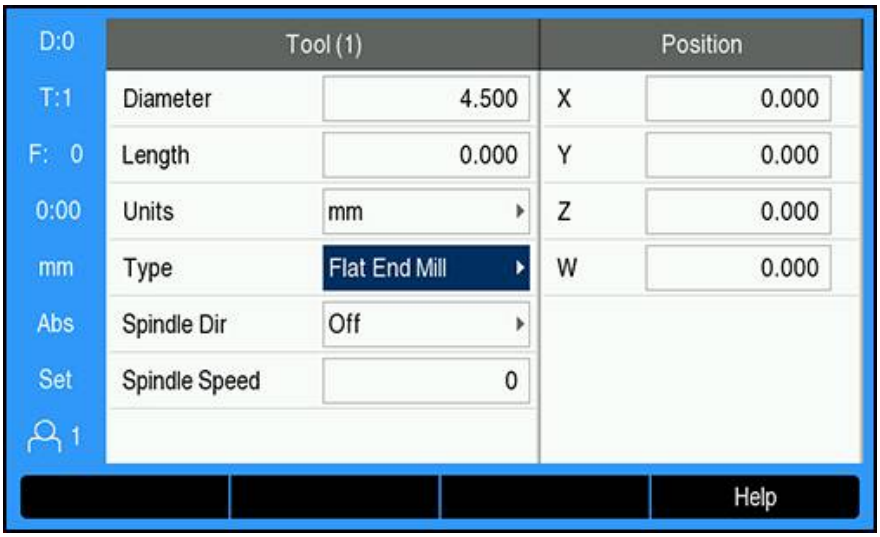

To enter data into a **Tool** form:

- ▶ Press the **Tool** soft key
- ▶ Use the **up** or **down arrow** key to highlight the desired tool

or

- ▶ Enter the tool number using the numeric keypad
- ▶ Press the **Enter** key
- > The **Tool** form for the selected tool is displayed
- ▶ Enter the tool **Diameter**
- ▶ Enter the tool **Length**

or

- ▶ Press the **Teach** soft key and follow the procedure for **Teaching length offset** described in this section.
- ▶ Select the tool **Units**
  - **inch**
  - **mm**
- ▶ Select the tool **Type**
  - **Not Defined**
  - **Ball End Mill**
  - **Boring Head**
  - **Broach**
  - **Carbide Mill**
  - **Counter Bore**
  - **Counter Sink**
  - **Drill**
  - **Engraving Tip**
  - **Flat End Mill**
  - **Fly Cutter**
  - **Pilot Drill**
  - **Reamer**
  - **Roughing Mill**
  - **Shell End Mill**
  - **Special Mill**
  - **Tap**

Spindle data is required when **Spindle Speed** control has been installed. Available on the DRO 300 only.

Further information: "Spindle Speed control operation", Page 174

- ▶ Press the **enter** key to save the tool changes and return to the **Tool Table**

Teaching length offset

It is also possible to have the product determine an offset. This method involves touching the tip of each tool to a common reference surface. This allows the product to determine the difference between the length of each tool.

i	Only the tools set using the same reference surface may be changed without having to reset the datum.

i	If the tool table already contains tools in which the length has been set, the reference surface should first be established using one of them. If not, you will not be able to switch between the new tools and the existing tools without having to re-establish the datum. Before adding the new tools, select one of the tools from the tool table. Touch the tool to a reference surface and set the datum to 0

To teach **Length Offset**:

- ▶ Move the tool until its tip is touching the reference surface
- ▶ Press the **Teach** soft key
- > The product will calculate an offset relative to the reference surface
- ▶ Repeat the procedure for each additional tool using the same reference surface

9.3.5 Selecting a tool

Before you start machining, select the tool you are using from the **Tool Table**. The product then takes into account the stored tool data when working with tool compensation.

To select a tool:

- ▶ Press the **Tool** soft key
- ▶ Use the **up** or **down arrow** keys to highlight the tool you want to select
- ▶ Press the **Use** soft key
- ▶ Verify in the status bar that the correct tool was selected

9.4 Setting a datum

Datum settings define the relationships between the axis positions and the display values.

The easiest way to set datum points is to use the probing function when probing the workpiece with the edge of a tool.

Datum points can also be set by touching the edges of the workpiece, one after the other with a tool, and manually entering the tool positions as datum points.

The datum table can hold up to 10 datum points. In most cases this will eliminate from having to calculate the axis travel when working with complicated workpiece drawings containing several datums.

9.4.1 Setting a workpiece datum without using the probing function

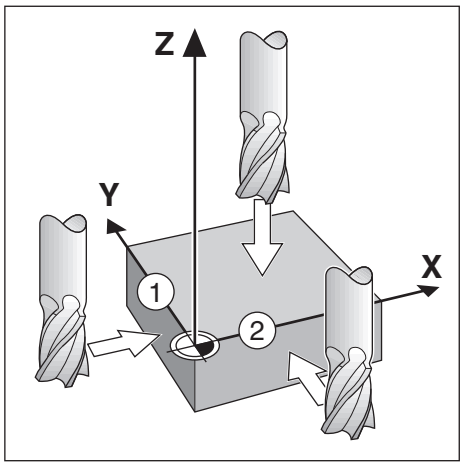

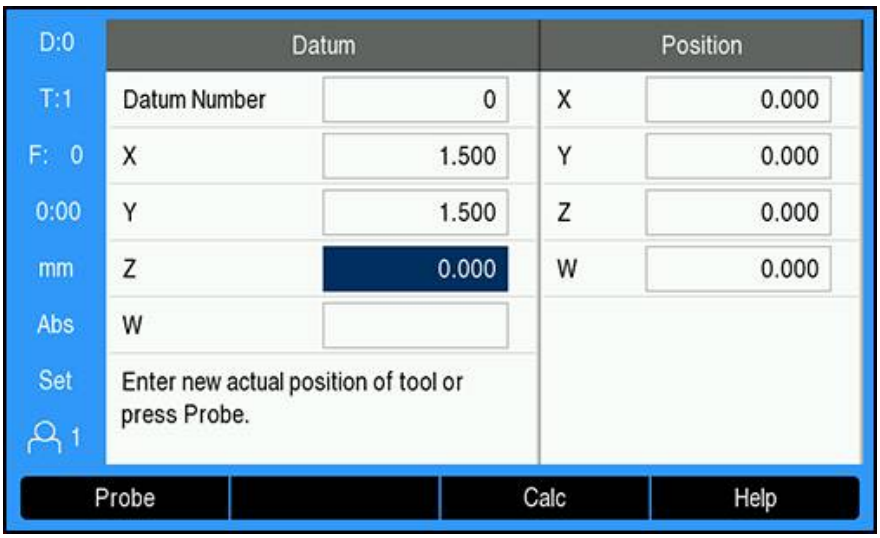

- Axis sequence in this example: X - Y - Z

To set a datum without the probing function:

- Press the **Datum** soft key
- Enter the **Datum Number**
- Highlight the X axis field
- Touch the workpiece at edge **1**
- Enter the position of the tool center (X = 1.5 mm)
- Highlight the Y axis field
- Touch the workpiece at edge **2**
- Enter the position of the tool center (Y = 1.5 mm)
- Highlight the Z axis field
- Touch the workpiece surface
- Enter the position of the tool tip (Z = 0 mm) for the Z coordinate of the datum
- Press the **enter** key

9.4.2 Probing with a tool

A tool or non-electrical edge finder can be used to set datum points.

The following probing functions are available:

- Workpiece edge as datum: **Edge** soft key
- Centerline between two workpiece edges: **Center Line** soft key
- Center of a hole or cylinder: **Circle Center** soft key

In all probing functions the product takes into account the current tool's tip diameter.

Canceling a probing function

To cancel a probing function while it is active:

- ▶ Press the **C** key

Probing an Edge with a tool

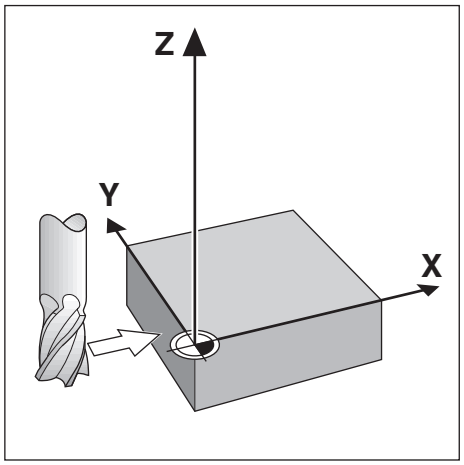

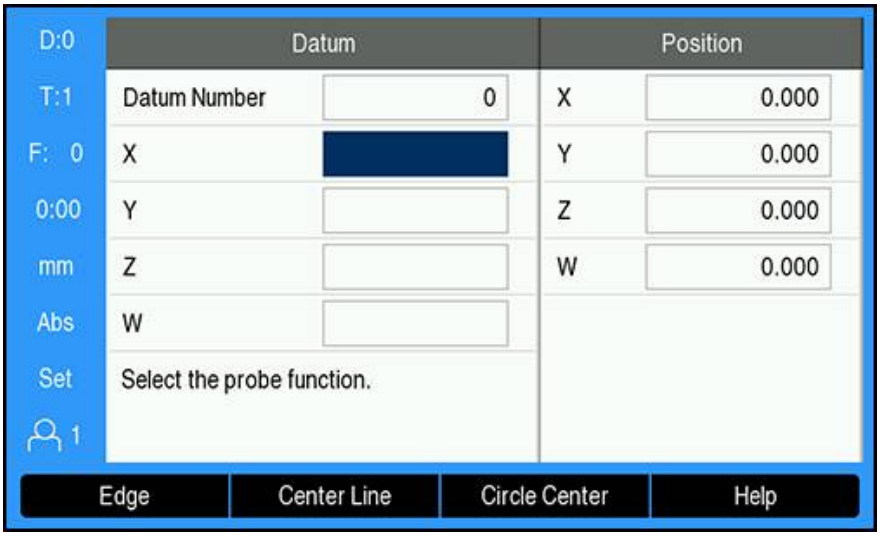

To probe an edge with a tool:

- Set the active tool to the tool that will be used to set the datum
- Press the **Datum** soft key
- Enter the **Datum Number**
- Highlight the **X** axis field
- Press the **Probe** soft key
- Press the **Edge** soft key
- Touch the workpiece edge
- Press the **Teach** soft key

The **Teach** soft key is useful when determining tool data by touching the workpiece in the absence of an edge finder with feedback. To avoid losing the position value when the tool is retracted, press the **Teach** soft key to store the value while it is in contact with the workpiece edge. The location for the touched edge will take into account the diameter of the tool in use (T:1, 2...), and the last direction the tool was moved prior to pressing the **Teach** soft key.

- Retract the tool from the workpiece
- Enter the position of the workpiece edge
- Press the **enter** key

Probing a Center Line with a tool

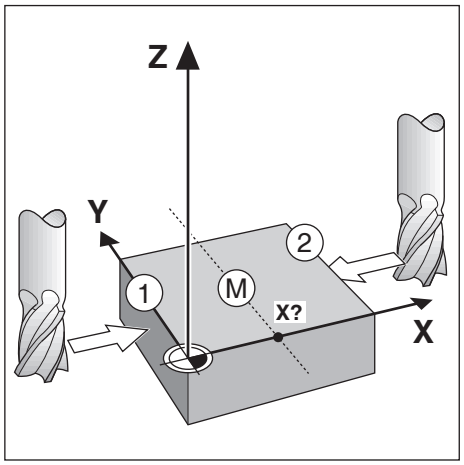

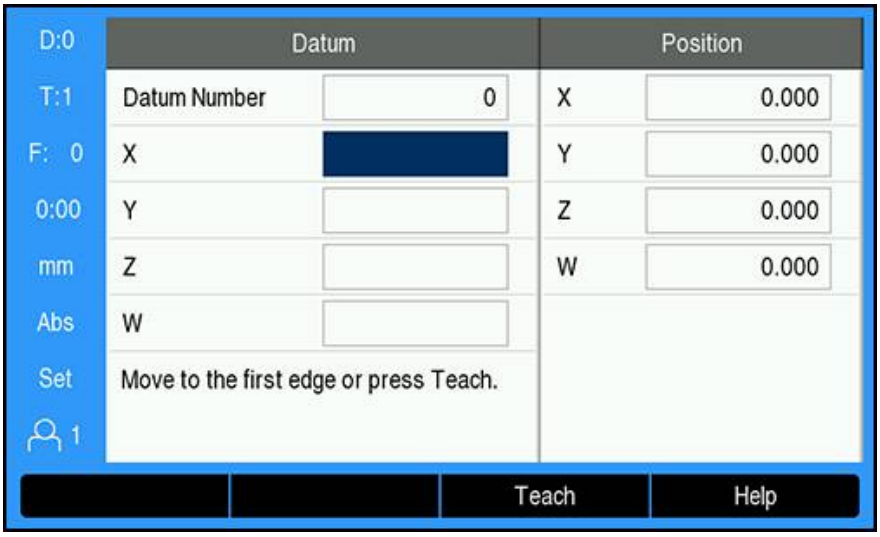

To probe a centerline with a tool:

- Set the active tool to the tool that will be used to set the datum
- Press the **Datum** soft key
- Enter the **Datum Number**
- Highlight the **X** axis field
- Press the **Probe** soft key
- Press the **Center Line** soft key
- Touch the first workpiece edge **1**
- Press the **Teach** soft key
- Touch the second workpiece edge **2**
- Press the **Teach** soft key
- > The datum is set to 0.000 and the distance between the edges is displayed
- Retract the tool from the workpiece
- Enter the position of the workpiece centerline
- Press the **enter** key

Probing a Circle Center with a tool

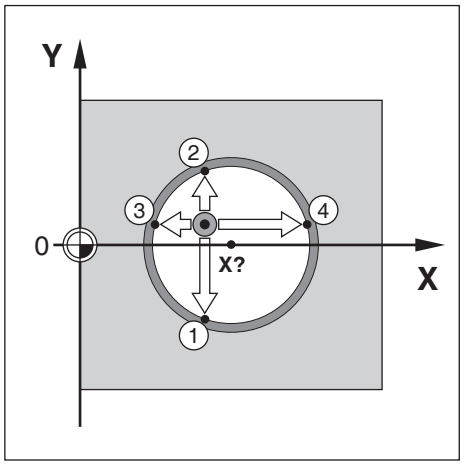

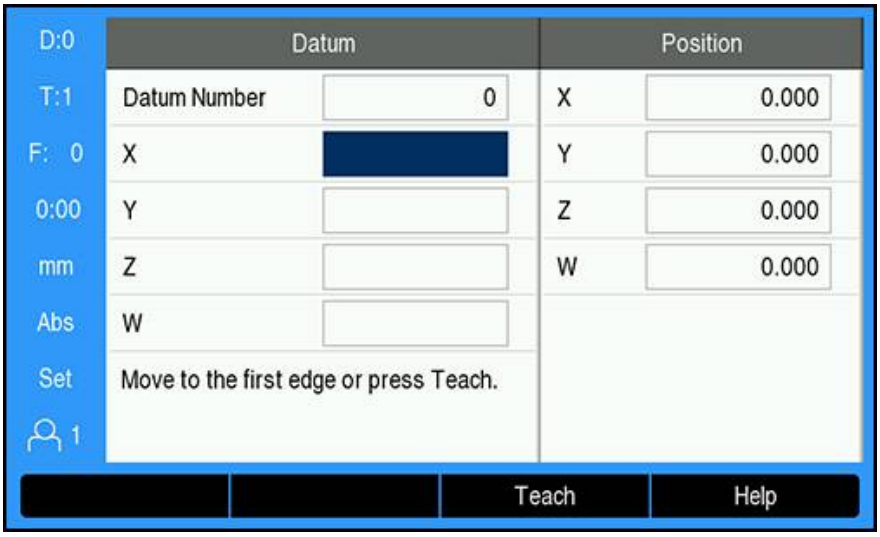

To probe a **Circle Center** with a tool:

- Set the active tool to the tool that will be used to set the datum
- Press the **Datum** soft key
- Enter the **Datum Number**
- Highlight the **X** axis field
- Press the **Probe** soft key
- Press the **Circle Center** soft key
- Touch the first workpiece edge **1**
- Press the **Teach** soft key
- Touch the second workpiece edge **2**
- Press the **Teach** soft key
- Touch the third workpiece edge **3**
- Press the **Teach** soft key
- Touch the fourth workpiece edge **4**
- Press the **Teach** soft key

> The **X** and **Y** datums are set to 0.000 and the diameter of the circle is displayed.

- Retract the tool from the workpiece
- Enter the **X** and **Y** axis position of the circle center
- Press the **enter** key

9.4.3 Probing with an edge finder

This feature is available on DRO 300 products only.

An electrical edge finder can be used to set datum points.

The following probing functions are available:

- Workpiece edge as datum: **Edge** soft key
- Centerline between two workpiece edges: **Center Line** soft key
- Center of a hole or cylinder: **Circle Center** soft key

In all probing functions the product takes into account the edge finder's tip diameter.

The edge finder's dimensional characteristics must first be setup in order to perform probing.

Further information: "Edge Finder", Page 89

Probing an Edge with an edge finder

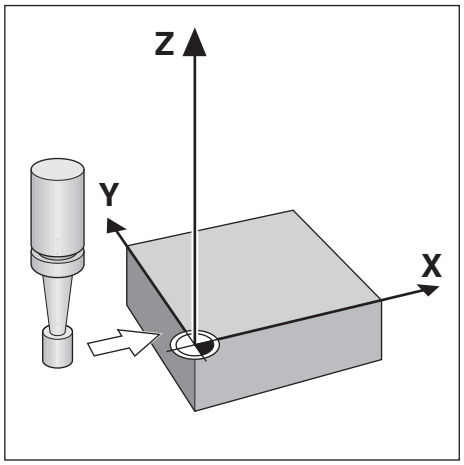

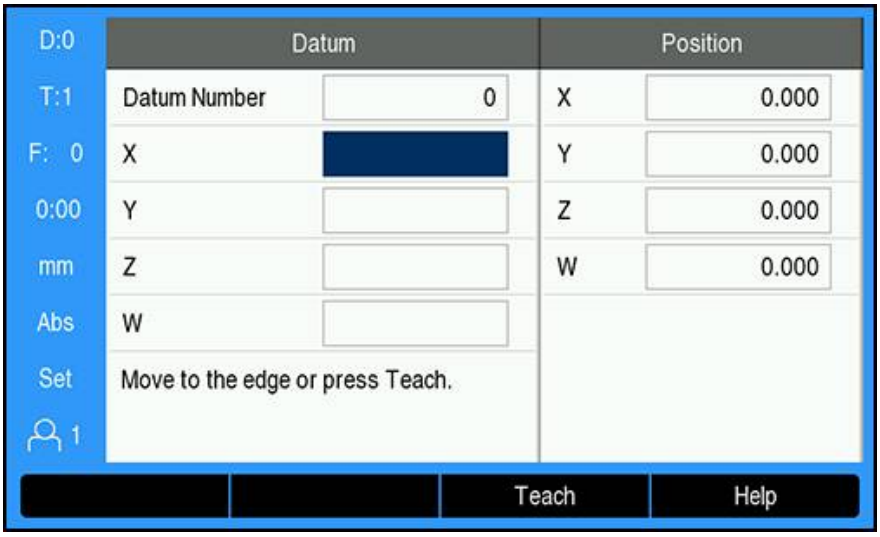

To probe an **Edge** with an edge finder:

- Press the **Datum** soft key
- Enter the **Datum Number**
- Highlight the **X** axis field
- Press the **Probe** soft key
- Press the **Edge** soft key
- Touch the workpiece edge
- Retract the edge finder from the workpiece
- Enter the position of the workpiece edge
- Press the **enter** key

Probing a Center Line with an edge finder

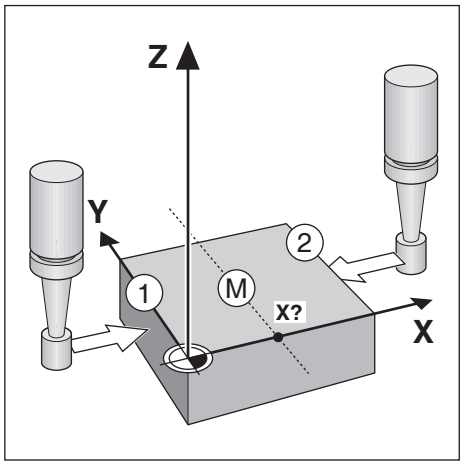

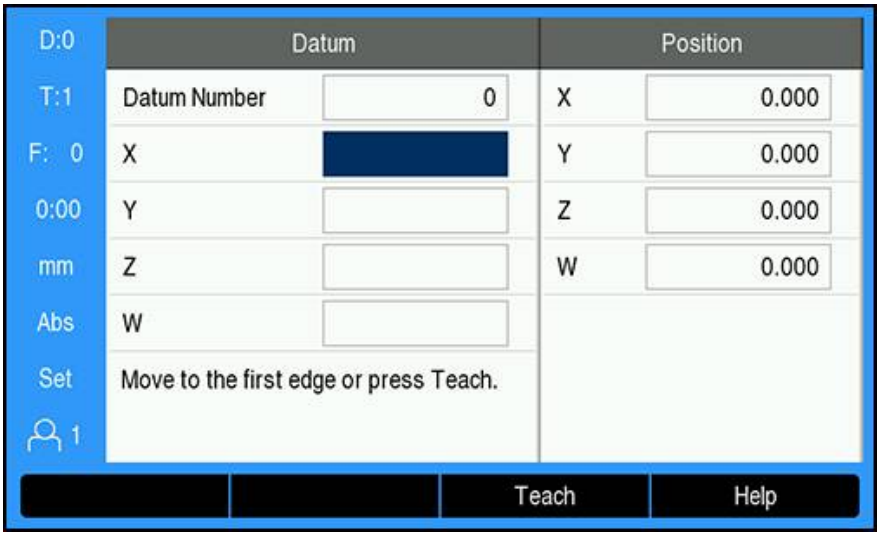

To probe a **Center Line** with an edge finder:

- Press the **Datum** soft key
- Enter the **Datum Number**
- Highlight the **X** axis field
- Press the **Probe** soft key
- Press the **Center Line** soft key
- Touch the first workpiece edge **1**
- Touch the second workpiece edge **2**

> The datum is set to 0.000 and the distance between the edges is displayed

- Retract the edge finder from the workpiece
- Enter the position of the workpiece centerline
- Press the **enter** key

Probing a Circle Center with an edge finder

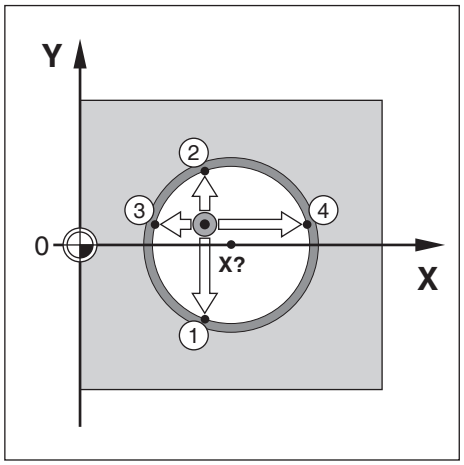

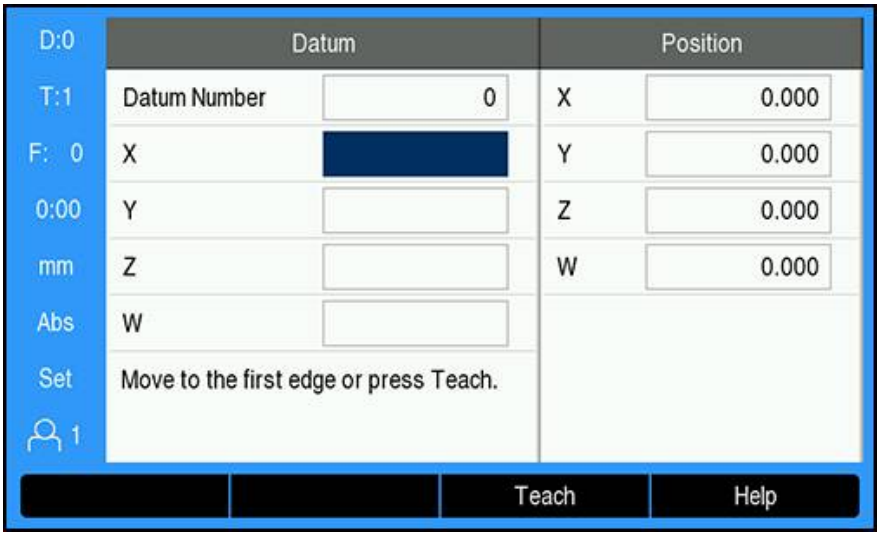

To probe a **Circle Center** with a tool:

- Press the **Datum** soft key
- Enter the **Datum Number**
- Highlight the **X** axis field
- Press the **Probe** soft key
- Press the **Circle Center** soft key
- Touch the first workpiece edge **1**
- Touch the second workpiece edge **2**
- Touch the third workpiece edge **3**
- Touch the fourth workpiece edge **4**

> The **X** and **Y** datums are set to 0.000 and the diameter of the circle is displayed.

- Retract the edge finder from the workpiece
- Enter the **X** and **Y** axis position of the circle center
- Press the **enter** key

9.5 Presetting a target position

The **Preset** function allows you to indicate the nominal (target) position for the next move. Once the new nominal position information is entered the display will switch to Distance-To-Go mode and show the distance between the current position and the nominal position. You now only need to move the table until the display is zero and you will be at the required nominal position. The information for the location of the nominal position can be entered as an absolute move from the current datum zero or as an incremental move from the current nominal position.

Presetting also allows you to indicate which side of the tool will be doing the machining at the nominal position. The **R +/-** soft key in the **Preset** form defines the offset that will be in effect during the move. **R+** indicates that the center line of the current tool is in a more positive direction than the edge of the tool. **R-** indicates that the center line is in a more negative direction than the edge of the current tool. Using **R +/-** offsets automatically adjusts the distance-to-go value to account for the diameter of the tool.

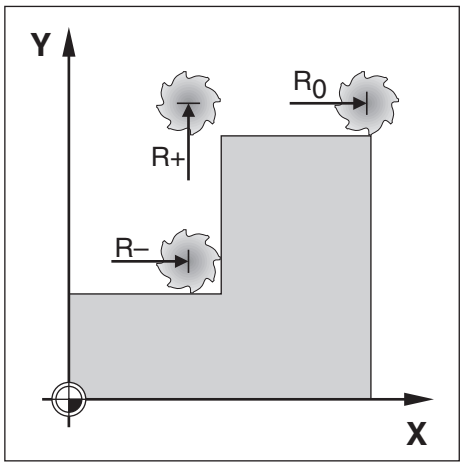

9.5.1 Absolute distance preset

Example

Milling a shoulder by traversing to display value zero using absolute position.

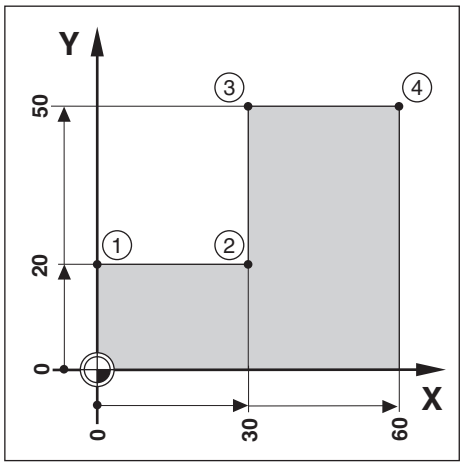

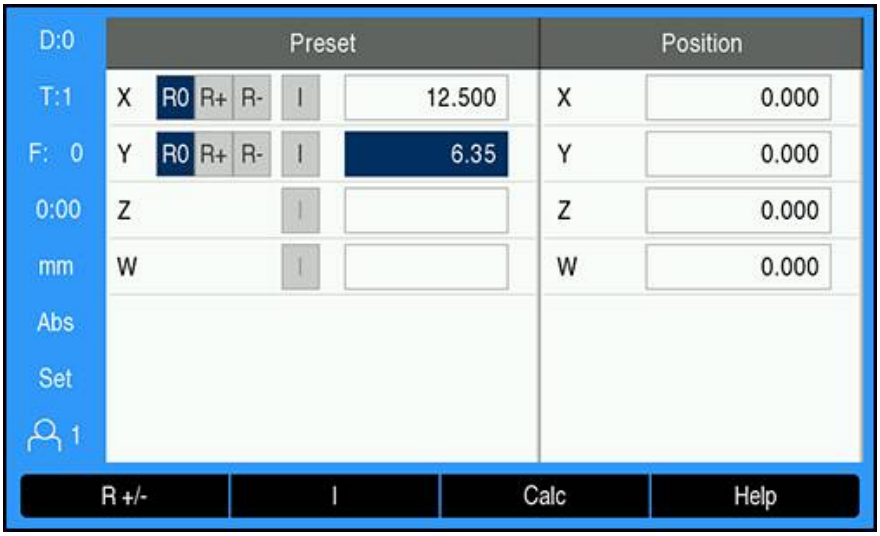

The coordinates are entered as absolute dimensions; the datum is the workpiece zero. Using this figure example:

- Corner **1**: X = 0 / Y = 20
- Corner **2**: X = 30 / Y = 20
- Corner **3**: X = 30 / Y = 50
- Corner **4**: X = 60 / Y = 50

Press the **Preset** soft key, then an axis key to recall the last entered preset value for that axis.

Preparation

- ▶ Select the tool with the appropriate tool data
- ▶ Pre-position the tool to an appropriate location (such as X = Y = -10)
- ▶ Move the tool to milling depth
- ▶ Press the **Preset** soft key
- ▶ Press the **Y axis** key

Alternative method one

- Press the **Set/Zero** soft key so that you are in **Set** mode
- Press the **Y axis** key
- Enter the nominal position value for corner point **1**: Y = 20
- Select **R +** with the **R +/-** soft key
- Press the **enter** key
- Traverse the **Y** axis until the display value is zero

> The square in the graphical positioning aid is now centered between the two center marks.

- Press the **Preset** soft key
- Press the **X axis** key

Alternative method two

- Press the **Set/Zero** soft key so that you are in **Set** mode
- Press the **X axis** key
- Enter nominal position value for corner point **2**: X = 30
- Select **R -** with the **R +/-** soft key
- Press the **enter** key
- Traverse the **X** axis until the display value is zero

> The square in the near zero warning is now centered between the two center marks

Presets can be entered in the same manner for corners **3** and **4**.

9.5.2 Incremental distance preset

Example

Drilling by traversing to display value zero with incremental positioning.

> Enter the coordinates in incremental dimensions. These are indicated in the following (and on the screen) with a preceding I (Incremental). The datum is the workpiece zero.

- Hole **1** at: X = 20 / Y = 20
- Distance from hole **1** to hole **2**: XI = 30 / YI = 30
- Hole depth: Z = –20
- Operating mode: Distance-To-Go (Inc)

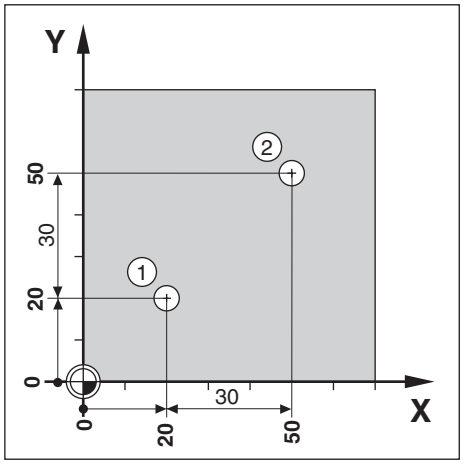

To preset the location for hole **1**:

- Press the **Preset** soft key
- Press the **X axis** key
- Enter the nominal position value for hole **1**: X = 20 and ensure no tool radius is active

Note that these presets are Absolute Presets.

- Press the **down arrow** key
- Enter the nominal position value for hole **1**: Y = 20
- Ensure no tool radius compensation is showing
- Press the **down arrow** key
- Enter the nominal position value for the hole depth: Z = -20
- Press the **enter** key
- Drill hole **1**: Traverse the **X**, **Y**, and **Z** axis until the display value is zero
- > The square in the graphical positioning aid is now centered between the two center marks
- Retract the drill

To preset the location for hole **2**:

- Press the **Preset** soft key
- Press the **X axis** key
- Enter the nominal position value for hole **2**: X = 30
- Press the **I** soft key to mark your input as an incremental dimension
- Press the **Y axis** key
- Enter the nominal position value for hole **2**: Y = 30

- Press the **I** soft key to mark your input as an incremental dimension
- Press the **enter** key
- Traverse the **X** and **Y** axes until the display value is zero
- The square in the graphical positioning aid is now centered between the two center marks

To preset the **Z** axis:

- Press the **Preset** soft key
- Press the **Z axis** key
- Press the **enter** key to use the last entered preset
- Drill hole **2**: Traverse the Z axis until the display value is zero

> The square in the near zero warning is now centered between the two center marks

- Retract the drill

9.6 Features

Pressing the **Features** soft key provides access to the **Circle Pattern**, **Linear Pattern**, **Incline Mill**, and **Arc Mill** milling features.

The **Circle Pattern** and **Linear Pattern** features provide ways to calculate and machine various hole patterns. The **Incline Mill** and **Arc Mill** features provide ways to machine a flat diagonal surface (**Incline Mill**), or a rounded surface (**Arc Mill**) using a manual machine.

Defined patterns are remembered when power is cycled.

The following milling **Features** soft keys are available:

Soft key	Function
Circle Pattern	Press the **Circle Pattern** soft key to access the Circle Pattern table
Linear Pattern	Press the **Linear Pattern** soft key to access the Linear Pattern table
Incline Mill	Press the **Incline Mill** soft key to access the Incline Mill form
Arc Mill	Press the **Arc Mill** soft key to access the Arc Mill form

9.6.1 Circle and linear patterns

This section describes the circle and linear pattern tables and capabilities. The product provides storage of ten user definable patterns each for circle and linear. Once patterns are defined, they are remembered when power is cycled. They can be recalled, and executed from the DRO, or from a program.

To access the **Circle Pattern** table or **Linear Pattern** table:

- ▶ Press the **Features** soft key
- > The **Circle Pattern** and **Linear Pattern** soft keys are shown
- ▶ Press the **Circle Pattern** soft key to access the **Circle Pattern** table

or

- ▶ Press the **Linear Pattern** soft key to access the **Linear Pattern** table
- > The corresponding hole pattern table will open

The following soft keys are available while in the **Circle Pattern** and **Linear Pattern** tables.

Function	Soft key
New	Press the **New** soft key to create a new circle or linear pattern
Edit	Press the **Edit** soft key to edit an existing pattern
Clear	Press the **Clear** soft key to delete an existing pattern
Run	Press the **Run** soft key to execute a pattern
Help	Press the **Help** soft key for additional information about the pattern

Circle and linear hole patterns

Required Circle Pattern information

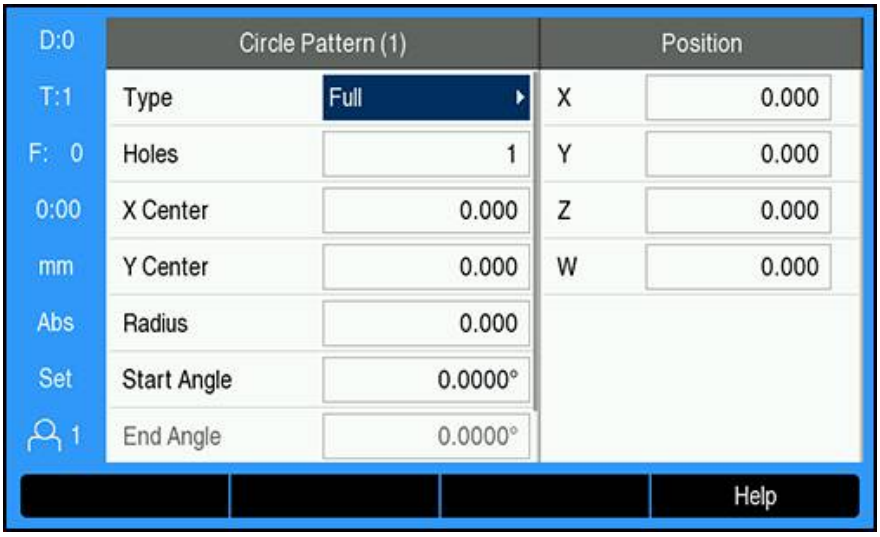

- **Type**: type of pattern, **Full** or **Segment**
- **Holes**: number of holes in the pattern
- **X Center**: X axis location of the center of the hole pattern
- **Y Center**: Y axis location of the center of the hole pattern
- **Radius**: radius of the pattern
- **Start Angle**: angle between X axis and the first hole
- **End Angle**: angle between the X axis and the last hole
- **Z Depth**: the target depth for drilling in the tool axis

Required Linear Pattern information

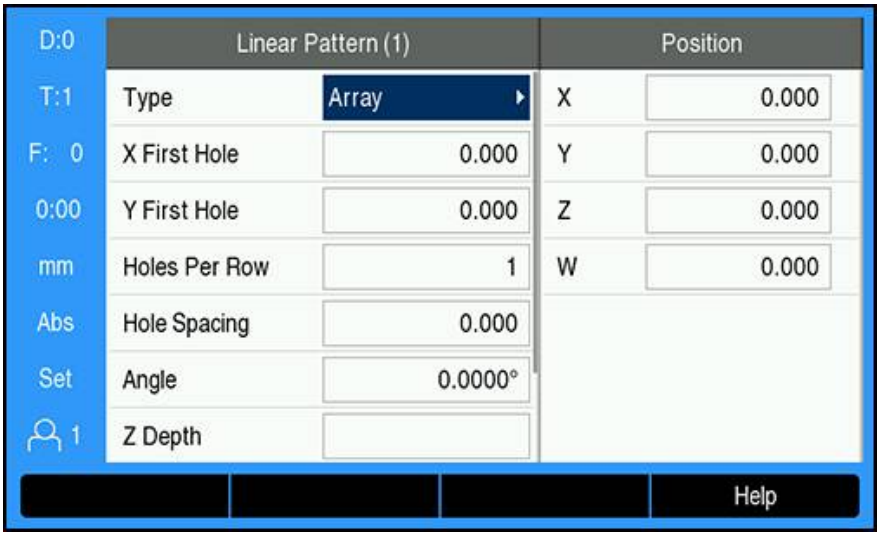

- **Type**: type of pattern, **Array** or **Frame**
- **X First Hole**: X axis location of the first hole of the pattern
- **Y First Hole**: Y axis location of the first hole of the pattern
- **Holes Per Row**: number of holes in each row of a pattern
- **Hole Spacing**: the spacing between each hole in a row
- **Angle**: the angle or rotation of the pattern
- **Z Depth**: the target depth for drilling in the tool axis
- **Number of Rows**: the number of rows in the pattern
- **Row Spacing**: the spacing between each row of the pattern

The **Circle Pattern** or **Linear Pattern** table is used to define up to ten different circle hole patterns (Full or Segment) and ten different linear hole patterns (Array or Frame).

Creating and editing a pattern

To create or edit a pattern in the table:

▶ Press the **Features** soft key
▶ Press the **Circle Pattern** or **Linear Pattern** soft key
> The pattern table will show any patterns that have been previously defined
▶ Press the **up** or **down arrow** keys to highlight a table entry
▶ Press the **New** soft key to create a new entry or press the **Edit** soft key to edit an existing entry

or

▶ Press the **enter** key
> The pattern form is opened
▶ Enter the information to define the pattern
▶ Press the **enter** key
> The pattern will be entered into the appropriate table. It can now be modified, executed, or referred to from a program.

Deleting a pattern

To delete a pattern from the table:

- Press the **Features** soft key
- Press the **Circle Pattern** or **Linear Pattern** soft key
- Press the **up** or **down arrow** keys to highlight the pattern you would like to delete
- Press the **Clear** soft key
- Press the **enter** key to confirm deleting the pattern from the table

Running a pattern

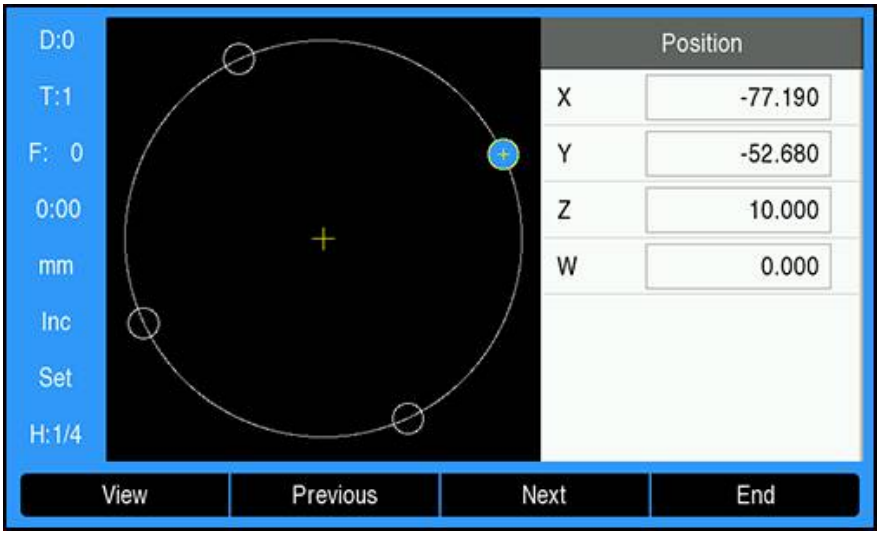

To run a pattern:

- Press the **Features** soft key
- Press the **Circle Pattern** or **Linear Pattern** soft key
- Press the **up** or **down arrow** keys to highlight the pattern you would like to run
- Press the **Run** soft key

> The product calculates the positions of the holes and can also provide a graphical view of the hole pattern

The following soft keys are available while running a pattern:

Soft key	Function
View	Press the **View** soft key to select the graphic view of the pattern.
Previous	Press the **Previous** soft key to select the previous hole in the pattern
Next	Press the **Next** soft key to select the next hole in the pattern
End	Press the **End** soft key to end execution of the pattern

Press the **View** soft key to toggle the views between Distance-to-Go (Inc) positions, graphic view, and Actual Value (Abs) positions.

The diameter of the active tool is displayed when in the graphic view.

Example: Entering data and running a circle pattern

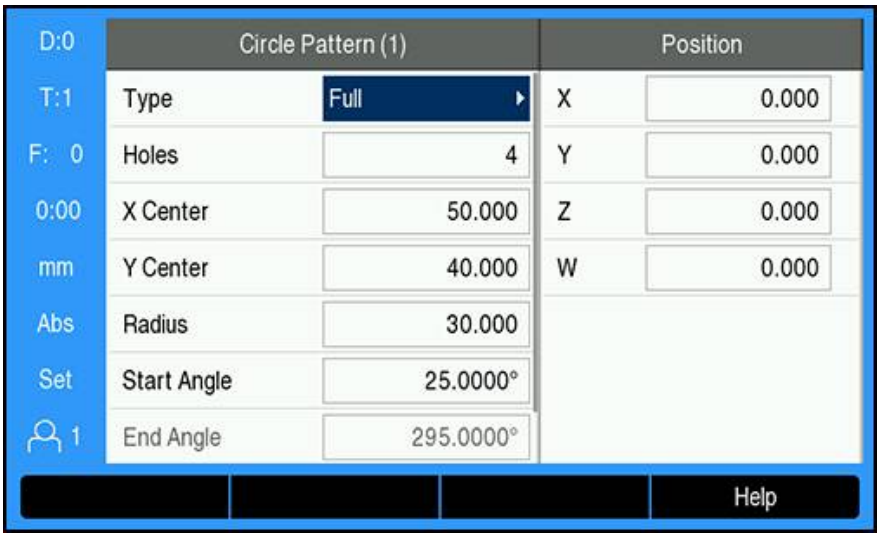

Entering the data:

- Press the **Features** soft key
- Press the **Circle Pattern** soft key
- Press the **up** or **down arrow** keys to select pattern **1**
- Press the **enter** key
- Select **Full** in the **Type** field
- Press the **down arrow** key to move to the next field
- Enter 4 for the number of **Holes**
- Enter 50 mm for the **X Center** location
- Enter 40 mm for the **Y Center** location
- Enter 125 mm for the **Radius** of the circle pattern
- Enter 25° for the **Start Angle**
- The **End Angle** is 295° and cannot be changed because the **Type** is **Full**
- Enter a **Z Depth** of -10 mm

The depth of the hole is optional and may be left blank

- Press the **enter** key

> The **Circle Pattern Table** now shows the pattern that was just defined as pattern **1**

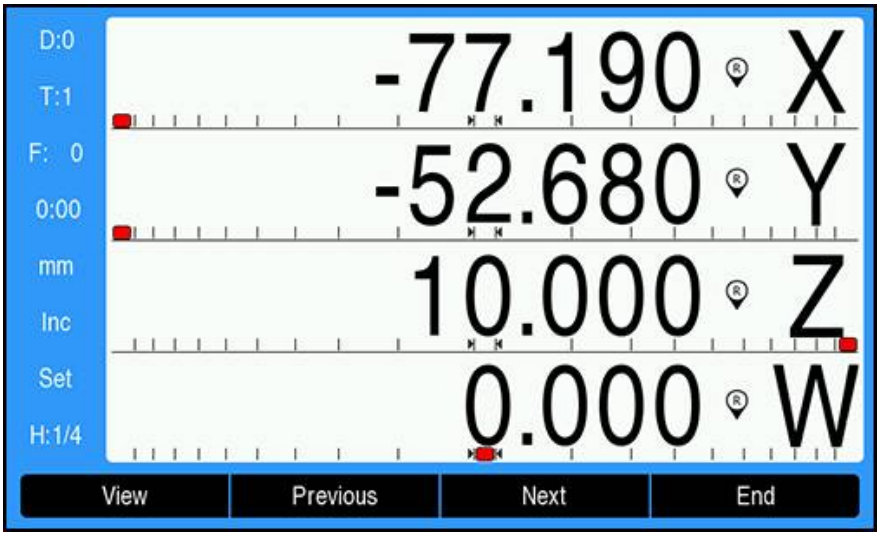

Running the pattern:

- Press the **Run** soft key
- The Distance-To-Go view is displayed
- Move to the hole, move the **X** and **Y** axis until their display values show 0.0
- Drill (Z depth): If a depth was entered into the pattern, move **Z** until it's display value shows 0.0. otherwise, drill to the desired depth
- Press the **Next** soft key
- Continue to drill the remaining holes in the same manner
- When the pattern is complete, press the **End** soft key

9.6.2 Incline and arc milling

The incline and arc milling features provide ways to machine a flat diagonal surface (incline milling) or a rounded surface (arc milling) using a manual machine. The product provides storage of ten user definable Incline Mill features and ten Arc Mill features. Once the features are defined, they are remembered when power is cycled. They can be recalled, and executed from the DRO, or from a program.

To access the **Incline Mill** or **Arc Mill** table:

- Press the **Features** soft key

> The **Incline Mill** and **Arc Mill** soft keys are shown

- Press the **Incline Mill** soft key to access the **Incline Mill** table

or

- Press the **Arc Mill** soft key to access the **Arc Mill** table

> The corresponding mill table will open

The following soft keys are available while in the **Incline Mill** and **Arc Mill** tables.

Function	Soft key
New	Press the **New** soft key to create a new **Incline Mill** or **Arc Mill** feature
Edit	Press the **Edit** soft key to edit an existing milling feature
Clear	Press the **Clear** soft key to delete an existing milling feature
Run	Press the **Run** soft key to execute a milling feature
Help	Press the **Help** soft key for additional information about the milling feature

Incline and arc milling features

Required Incline Mill information

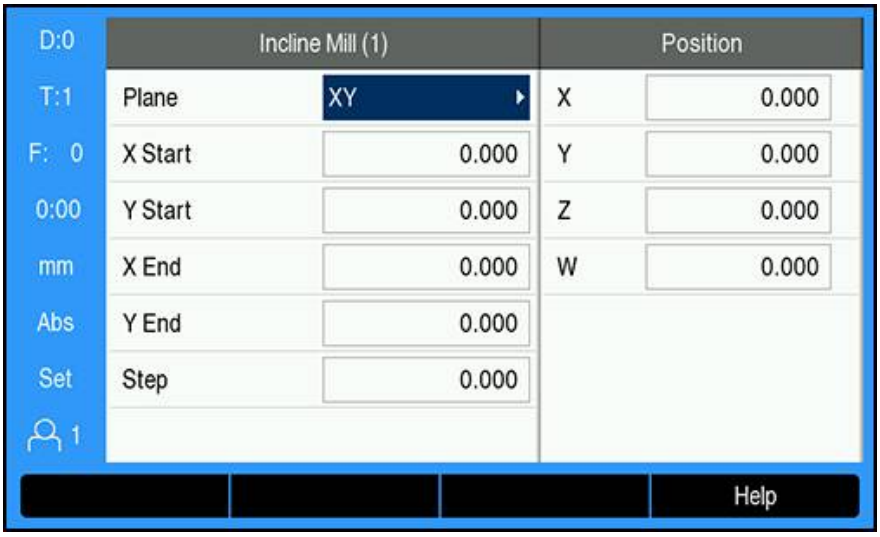

- **Plane**: the plane to be milled
- **X Start**: X axis start point
- **Y Start**: Y axis start point
- **X End**: X axis end point
- **Y End**: Y axis end point
- **Step**: The distance between each pass or each **Step** along the line

> The **Step** size is optional. If the value is zero, the operator decides at run-time how far to move between each **Step**.

Required Arc Mill information

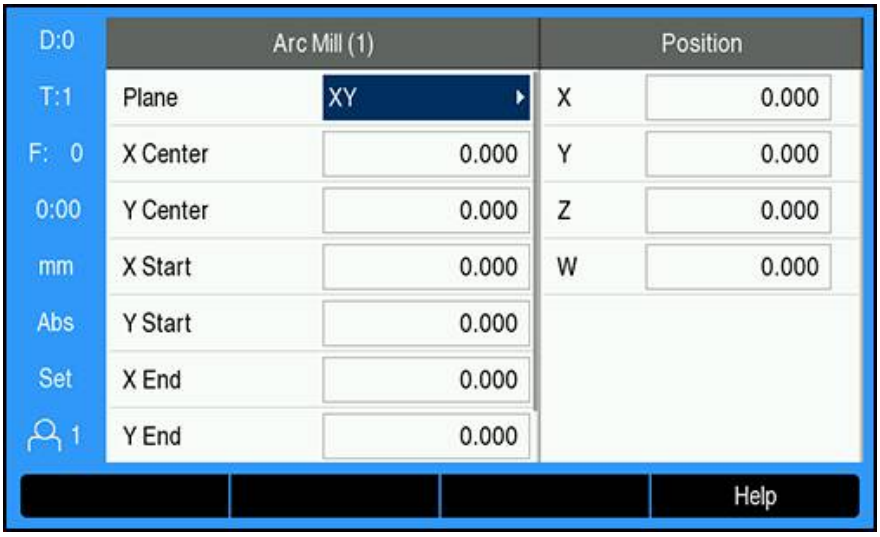

- **Plane**: the plane to be milled
- **X Center**: X axis center point
- **Y Center**: Y axis center point
- **X Start**: X axis start point
- **Y Start**: Y axis start point
- **X End**: X axis end point
- **Y End**: Y axis end point
- **Step**: The distance along the circumference of the arc between each pass, or **Step** along the arc's contour

> The **Step** size is optional. If the value is zero, the operator decides at run-time how far to move between each **Step**.

The **Incline Mill** or **Arc Mill** table is used to define up to ten different milling patterns.

Creating and editing a milling feature

To create or edit a feature in the table:

- ▶ Press the **Features** soft key
- ▶ Press the **Incline Mill** or **Arc Mill** soft key
- > The feature table will show any features that have been previously defined
- ▶ Press the **up** or **down arrow** key to highlight a table entry
- ▶ Press the **New** soft key to create a new entry or press the **Edit** soft key to edit an existing entry

or

- ▶ Press the **enter** key
- > The feature form is opened
- ▶ Enter the information to define the feature
- ▶ Press the **enter** key
- > The feature will be entered into the appropriate table. It can now be modified, executed, or referred to from a program.

Deleting a feature

To delete a feature from the table:

- Press the **Features** soft key
- Press the **Incline Mill** or **Arc Mill** soft key
- Press the **up** or **down arrow** keys to highlight the feature you would like to delete
- Press the **Clear** soft key
- Press the **enter** key to confirm deleting the feature from the table

Running a feature

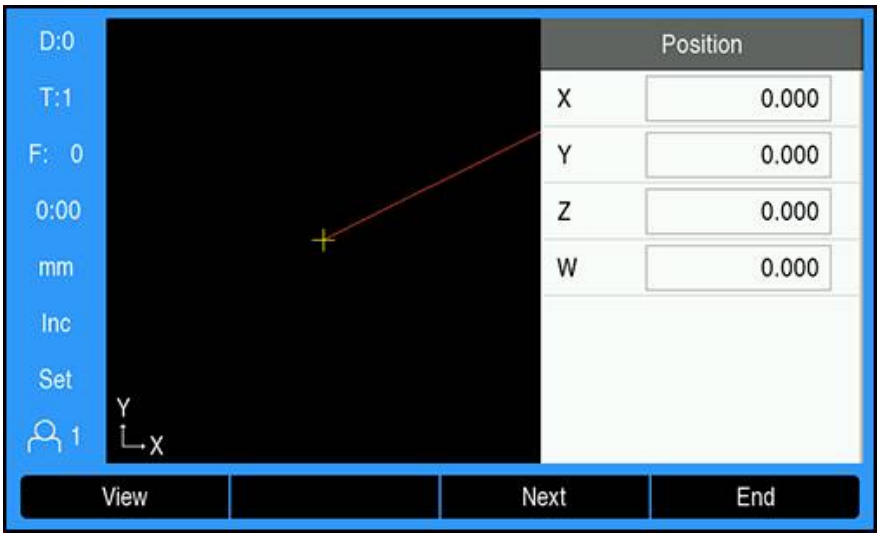

To run a feature:

- Press the **Features** soft key
- Press the **Incline Mill** or **Arc Mill** soft key
- Press the **up** or **down arrow** key to highlight the feature you would like to run
- Press the **Run** soft key

> The display switches to the incremental DRO view, showing the incremental distance from the start point

The following soft keys are available while running a pattern:

Soft key	Function
View	Press the **View** soft key to select the incremental DRO, contour view of feature, or absolute DRO
Previous	Press the **Previous** soft key to return to the previous pass
Next	Press the **Next** soft key to advance to the next pass
End	Press the **End** soft key to end execution of the milling operation

The tool radius compensation is applied based on the radius of the current tool. If the plane selection involves the tool axis, the tool tip is assumed to have a ball end.

- Move to the start point and make a plunge cut or the first pass across the surface
- Press the **Next** soft key to continue with the next step along the contour

> The incremental display shows the distance from the next pass along the line, or arc's contour

- To follow the contour, move the two axes in small steps, keeping the X, and Y positions as close to zero (0.0) as possible

> When no step size is specified, the incremental display always shows the distance from the closest point on the arc

- Press the **View** soft key to toggle through the three available views (incremental DRO, contour, and absolute DRO)

The contour view shows the position of the tool relative to the milling surface. When the cross hair representing the tool is on the line representing the surface, the tool is in position. The tool cross hair remains fixed in the center of the graph. As the table is moved, the surface line moves.

- Press the **End** soft key to exit the milling operation

> The tool offset direction (**R+** or **R-**) is applied based on the tool position. The operator must approach the contour surface from the appropriate direction for tool compensation to be correct.

9.7 Z/W coupling

> This feature is available on DRO 300 products only.

The **Mill** application provides a quick method for coupling the Z and W axes positions on a 4 axis system. The display can be coupled in either the Z or W displays.

Display the coupled position on the Z axis

To couple the Z and W axes and have the result displayed on the Z display:

- Press and hold the **Z** axis key approximately 2 seconds
- > The sum of the Z/W positions will be displayed on the Z display and the W display will be blank

Display the coupled position on the W axis

To couple the Z and W axes and have the result displayed on the W display:

- Press and hold the **W** axis key approximately 2 seconds
- > The sum of the Z/W positions will be displayed on the W display and the Z display will be blank

Disabling Z/W Coupling

To disable Z/W Coupling

- Press the axis key of the display that is blank
- > The individual Z and W display positions will be restored

10

Turning specific operations

10.1 Overview

This chapter describes operations and soft key functions specific to turning applications.

Make sure that you have read and understood the "Basic Operation" chapter before performing the activities described in this section.

Further information: "Basic operation", Page 53

10.2 Tool display icon

The **Ø** icon is used to indicate that the displayed value is a diameter value. No icon visible indicates that the display is a radius value.

10.3 Tool table

The DRO 203 can store the dimensional offsets for up to 16 tools. The DRO 300 can store the dimensional offsets for up to 100 tools.

When you change a workpiece and establish a new datum, all tools are automatically referenced from the new datum.

10.3.1 Importing and exporting

A **Tool Table** can be imported from an existing file or exported for backup and future use.

Further information: "Tool Table", Page 72

10.3.2 Setting tool offsets

Before you can use a tool, you must enter its offset (the cutting edge position). Tool offsets can be set using the **Tool/Set** or **Lock Axis** feature.

Tool/Set

The **Tool/Set** feature can be used to set a tool's offset using a tool when the diameter of the workpiece is known.

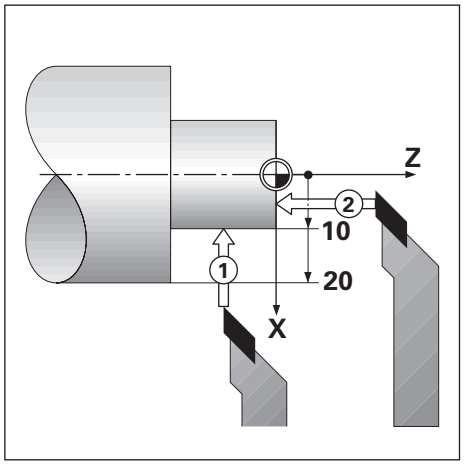

To set a tool offset using **Tool/Set**:

- Touch the known diameter in the X axis **1**
- Press the **Tool** soft key
- Highlight the desired tool
- Press the **enter** key
- Highlight the **X** axis field
- Enter the position of the tool tip, for example, X=10

> Remember to ensure the product is in diameter display mode Ø if the input is a diameter value.

- Touch the workpiece face with the tool **2**
- Highlight the **Z** axis field
- Set the position display for the tool tip to zero, Z=0
- Press the **enter** key

Lock Axis

The **Lock Axis** feature can be used to set a tool's offset when a tool is under load and the diameter of the workpiece is not known.

The **Lock Axis** feature is useful when determining tool data by touching the workpiece. To avoid losing the position value when the tool is retracted to measure the workpiece, this value can be stored by pressing the **Lock Axis** soft key.

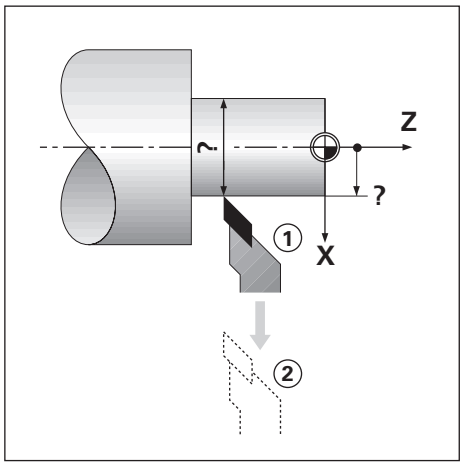

To set a tool offset using **Lock Axis**:

- Press the **Tool** soft key
- Highlight the desired tool
- Press the **enter** key
- Press the **X axis** key
- Turn a diameter in the X axis
- Press the **Lock Axis** soft key while the tool is still cutting
- Retract from the current position
- Turn the spindle off and measure the workpiece diameter
- Enter the measured diameter or radius

Remember to ensure the product is in diameter display mode Ø if you input a diameter value.

- Press the **enter** key

10.3.3 Selecting a tool

Before you start machining, select the tool you are using from the **Tool Table**. The product then takes into account the stored tool data when working with tool compensation.

To select a tool:

- Press the **Tool** soft key
- Use the **up** or **down arrow** keys to highlight the tool you want to select
- Press the **Use** soft key
- Verify in the status bar that the correct tool was selected

10.4 Setting a datum

Datum settings define the relationships between the axis positions and the display values.

For most lathe operations there is only one X-axis datum, the center of the chuck, but it may be helpful to define additional datums for the Z-axis.

The datum table can hold up to 10 datum points.

The recommended way to set datum points is to touch a workpiece at a known diameter, or location, then enter that dimension as the value that the display should be showing.

10.4.1 Setting a datum manually

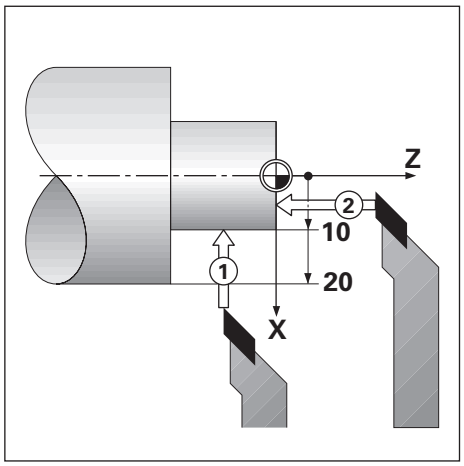

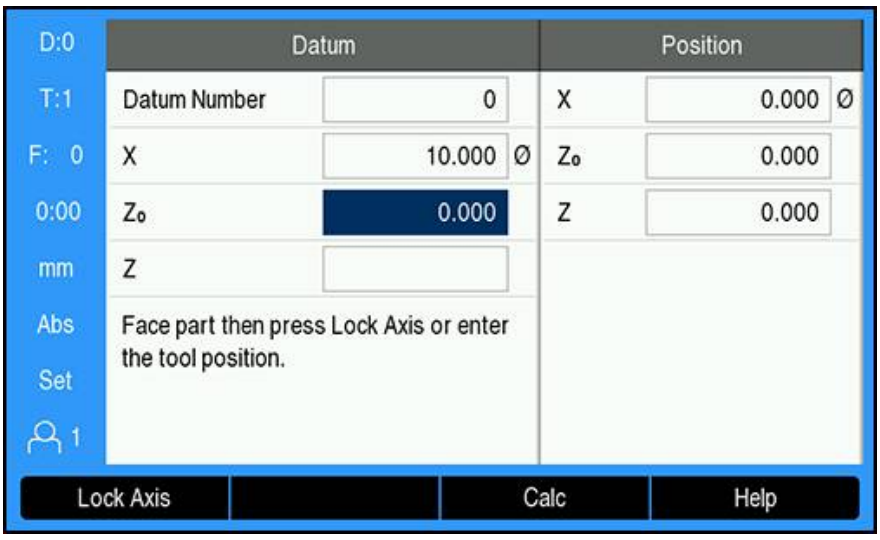

To set a datum manually:

- Press the **Datum** soft key
- Enter the **Datum Number**
- Highlight the **X** axis field
- Touch the workpiece at point **1**
- Press the **Lock Axis** soft key

or

- Enter the radius or diameter of the workpiece at that point

> Remember to ensure the product is in diameter display mode Ø if you input a diameter value.

- Highlight the **Z** axis field
- Touch the workpiece surface at point **2**
- Press the **Lock Axis** soft key

or

- Enter the position of the tool tip (Z= 0) for the Z coordinate of the datum
- Press the **enter** key

10.4.2 Setting a datum using the Lock Axis function

The **Lock Axis** function is useful for setting a datum when a tool is under load, and the diameter of the workpiece is not known.

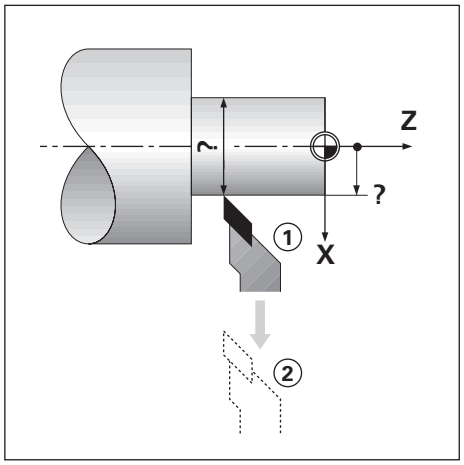

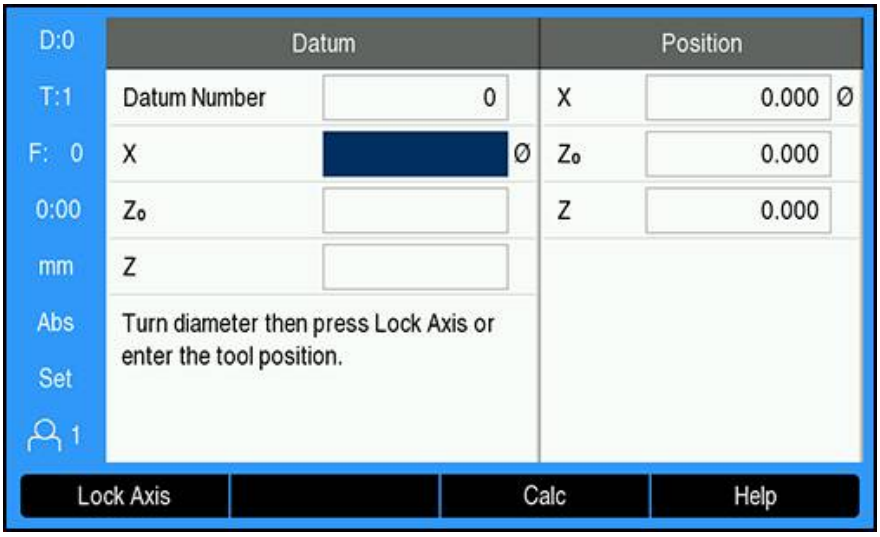

To set a datum using the **Lock Axis** function

- Press the **Datum** soft key
- Enter the **Datum Number**
- Highlight the **X** axis field
- Turn a diameter in the X axis
- Press the **Lock Axis** soft key while the tool is still cutting
- Retract from the current position
- Turn the spindle off, and measure the workpiece diameter
- Enter the measured diameter, for example, 40 mm
- Press the **enter** key

10.5 Taper Calculator

Use the **Taper Calculator** to calculate taper angle.

Calculate tapers by entering dimensions from a print, or by touching a tapered workpiece with a tool, or edge finder.

Calculating a taper with known diameters and length

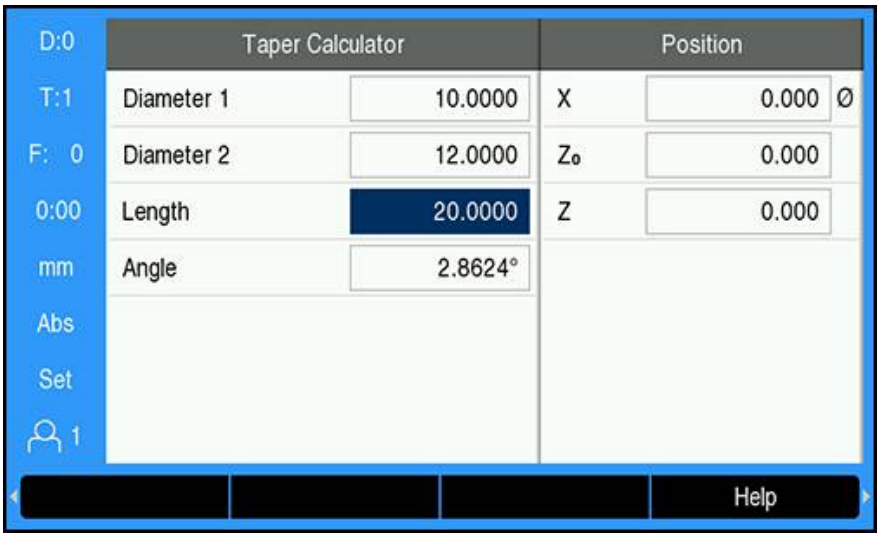

Requirements for taper calculation using diameters (**Diameter 1**, **Diameter 2**) and **Length**:

- Starting diameter
- End diameter
- Length of the taper

To calculate a taper with the known diameters and length:

▶ Press the **Calc** soft key
> The soft key selections change to include taper calculator functions
▶ Press the **Taper: D1/D2/L** soft key
▶ Enter the first diameter in the **Diameter 1** field and press the **enter** key

or

▶ Touch the tool to one point and press the **Teach** soft key
▶ Enter the second diameter in the **Diameter 2** field and press the **enter** key

or

▶ Touch the tool to the second point and press the **Teach** soft key

The taper angle is automatically calculated when using the **Teach** soft key

▶ When entering data with the numeric keypad, enter the **Length**
▶ Press the **enter** key
> The taper angle will appear in the **Angle** field

Calculating a taper with known change in radius and length

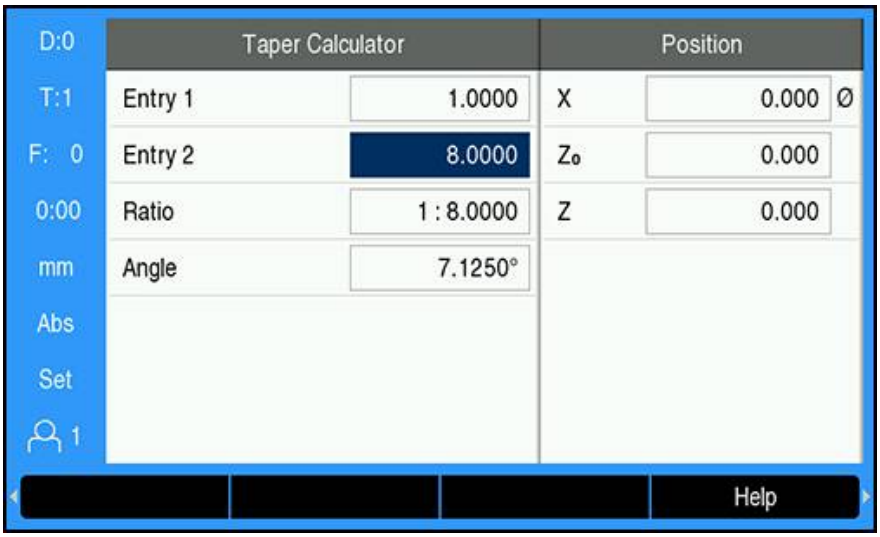

Taper ratio calculation requirements:

- Change in the radius of the taper
- Length of the taper

To calculate a taper using the change in radius and length of the taper:

- ▶ Press the **Calc** soft key
- > The soft key selections change to include taper calculator functions
- ▶ Press the **Taper: Ratio** soft key
- ▶ Enter the change in radius across the taper into the **Entry 1** field
- ▶ Highlight the **Entry 2** field
- ▶ Enter the length across the taper into the **Entry 2** field
- ▶ Press the **enter** key
- > The calculated **Ratio** and **Angle** will be displayed in their respective fields.

10.6 Presets

Preset functionality has been explained previously in this manual.

Further information: "Presetting a target position", Page 113

The explanation, and examples on those pages are based on a mill application. The basics of those explanations are the same for turning applications with two exceptions; Tool Diameter Offsets (R+/-), and Radius vs. Diameter inputs.

Tool diameter offsets have no applications with turning tools, so this functionality is not available while doing turning presets.

Input values can be either radius or diameter values. It is important to be sure the units you are entering for the preset agree with the state that the display is currently using. A diameter value is shown with a Ø symbol. The state of the display can be changed using the **Rad/Dia** soft key (available in both operating modes).

10.7 Diameter and radius measurements

Drawings for lathe parts usually give diameter values. The product can display either the diameter or the radius. When the diameter is being displayed, the diameter symbol Ø is shown next to the position value.

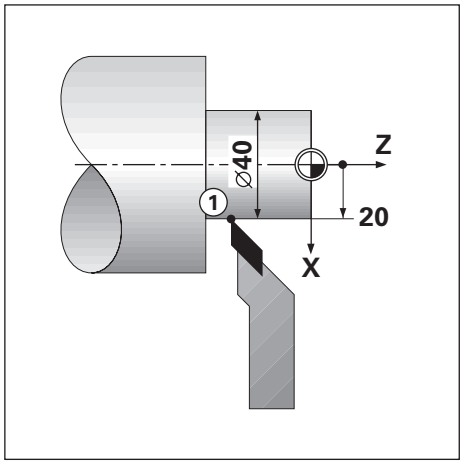

Example:

- Radius display, position 1, X = 20
- Diameter display, position 1, X = Ø 40

Activating diameter and radius measurements for an axis

Further information: "Diameter Axes", Page 89

Switching between radius and diameter measurements

The **Rad/Dia** soft key is only available when the **Application** is set to **Turn**.

Further information: "Readout Settings", Page 79

To toggle between radius and diameter measurements:

- Press the **Rad/Dia** soft key

10.8 Vectoring

Vectoring breaks down the movement of the compound axis into the crossfeed or longitudinal axes. If you are turning threads, for example, vectoring lets you see the diameter of the thread in the X-axis display, even though you are moving the cutting tool with the compound axis handwheel. With vectoring enabled, you can preset the desired radius or diameter in the X-axis, so that you can "machine to zero".

When vectoring is used, the top slide (compound) axis encoder must be assigned to the bottom display axis. The crossfeed component of movement of the axis will then be shown in the top display axis. The longitudinal component of movement of the axis will be shown in the middle display axis.

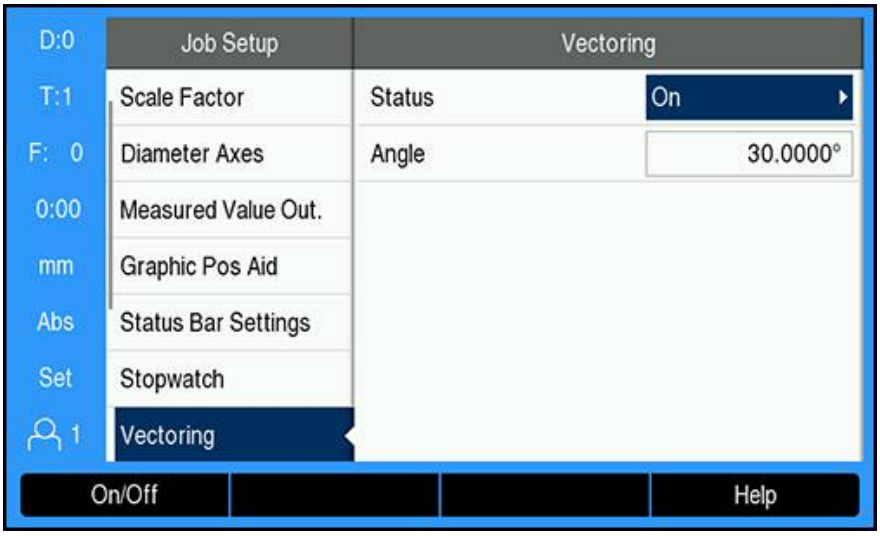

To enable vectoring:

- Press the **Setup** soft key
- Open in the sequence
  - **Job Setup**
  - **Vectoring**
- Press the **On/Off** soft key and select **On** to enable **Vectoring**
- Highlight the **Angle** field
- Enter the angle between the longitudinal slide and top slide with 0° indicating the top slide is moving parallel to the longitudinal slide
- Press the **enter** key to save the **Vectoring** parameter changes and return to the **Job Setup** menu

10.9 Z coupling

The **Turn** application provides a quick method for coupling the Z_0 and Z axes positions on a 3 or 4 axis system. The display can be coupled in either the Z_0 or Z displays.

Moving either Z_0 or Z inputs will update the coupled Z position.

The coupling is preserved in between power cycles.

> The reference mark for both encoders must be found in order to recall the previous datum when a position is coupled.

Display the coupled position on the Z_0 axis

To couple the Z_0 and Z axes, and have the result displayed on the Z_0 display:

- ▶ Press and hold the Z_0 key approximately 2 seconds
- > The sum of the Z positions will be displayed on the Z_0 display and the Z display will be blank

Display the coupled position on the Z axis

To couple the Z_0, and Z axes and have the result displayed on the Z display:

- ▶ Press and hold the Z key for approximately 2 seconds
- > The sum of the Z positions will be displayed on the Z display and the Z_0 display will be blank

Coupling the Z_0 and Z axes positions can also be done from the **Display Configuration** menu.

Further information: "Display Configuration", Page 78

Disabling Z coupling

To disable Z coupling:

- ▶ Press the axis key for the display that is blank
- > The Z_0 and Z displays will be restored

10.10 Thread Cycle

> This feature is available on DRO 300 products only.

> The **Thread Cycle** feature requires a rotary encoder to be installed to the lathe thread cutting leadscrew.

The **Thread Cycle** feature simplifies and enhances thread cutting on a lathe. The product provides one user definable **Thread Cycle** which can be recalled and executed from the DRO at any time during operation, and is remembered when the power is cycled.

Before the **Thread Cycle** feature can be used, **Thread Cycle** settings must be defined.

Encoder Setup

> To use the **Thread Cycle** feature on a 3 axes system, the rotary encoder must be installed on the last axis. For a 4 axes system, the encoder must be installed on the third or fourth axis.

To set up the rotary encoder:

- Press the **Setup** soft key
- Open in the sequence
  - **Installation Setup**
  - **Encoder Setup**

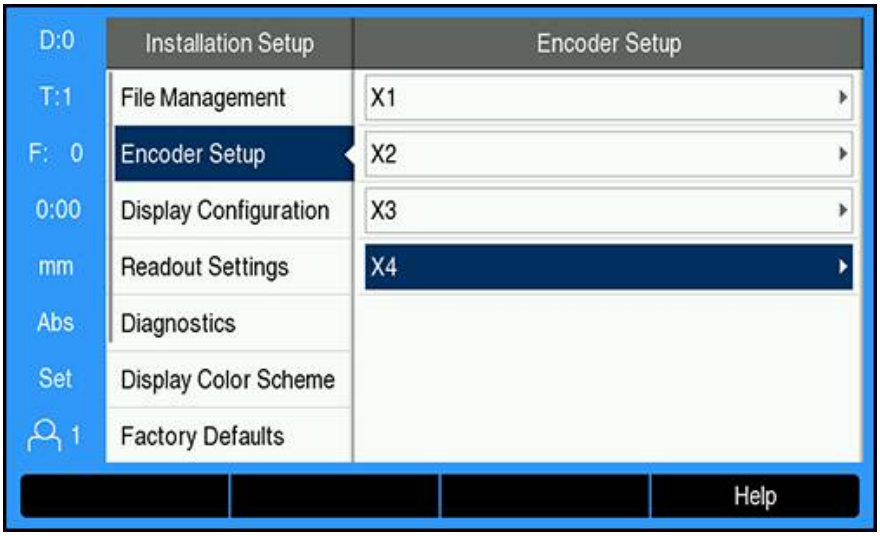

- Select the axis that the rotary encoder is connected to
- Press the **enter** key to display the axis data input form

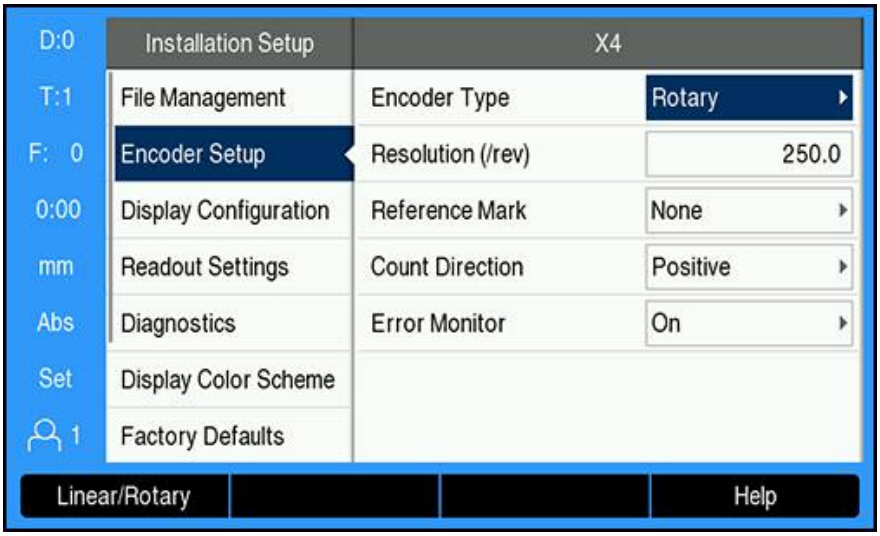

- Press the **Linear/Rotary** soft key to select **Rotary** in the **Encoder Type** field
- Define the remaining **Encoder Setup** parameters

Further information: "Encoder Setup", Page 76

- Press the **enter** key to save the setting
- Press the **C** key to return to the **Installation Setup** menu

Thread Cycle Setup

To define the **Thread Cycle Setup**:

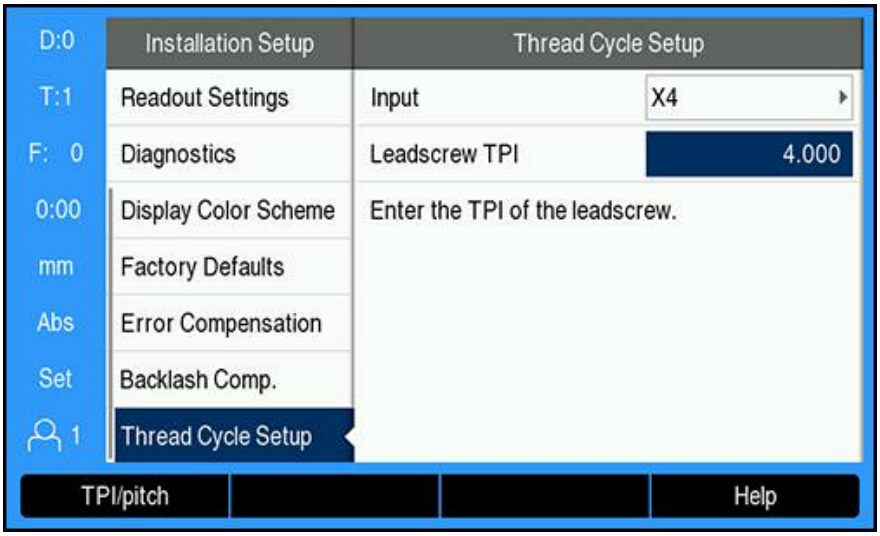

- Select **Thread Cycle Setup** from the **Installation Setup** menu
- Press the **enter** key to display the **Thread Cycle Setup** menu
- Select the **Input** axis that was specified for the rotary encoder
- Press the **enter** key to save the setting
- Enter the leadscrew threads per inch in the **Leadscrew TPI** field

or

- Press the **TPI/pitch** soft key to display the **Leadscrew pitch** field and enter the leadscrew pitch in mm
- Press the **enter** key to save the settings
- Press the **C** key twice to return to the DRO screen

Thread Cycle parameters

Once the rotary encoder axis has been defined and the **Thread Cycle Setup** is complete, the **Thread Cycle** parameters can be defined.

To define the **Thread Cycle** parameters:

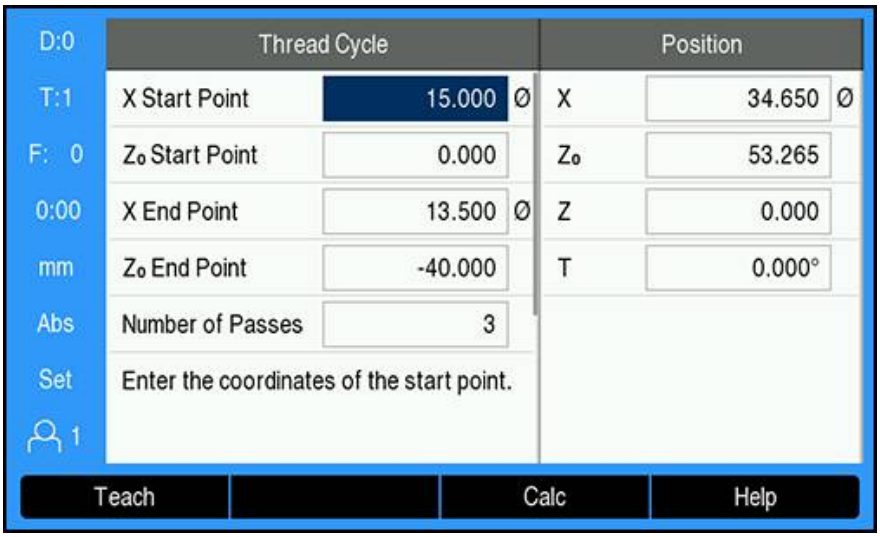

- ▶ Press the **Thread Cycle** soft key from the DRO screen to open the **Thread Cycle** form
- > The axes will be in the same mode as what the relative axis is set to: **Radius** or **Diameter**
- ▶ Enter the **X Start Point** coordinate
- ▶ Enter the **Z_0 Start Point** coordinate

Typically 0.0 is the normal starting position

- ▶ Enter the final cut thread diameter in the **X End Point** field

This is the smaller OD for external threads, and the larger ID for internal threads

- ▶ Enter the end point of the thread (thread length) in the **Z_0 End Point** field
- ▶ Enter the number of normal passes in the **Number of Passes** field

or

- ▶ Press the **Number/Depth** soft key and enter the depth of a normal pass in the **Depth of Passes** field
- ▶ Press the **down arrow** key
- > Additional options are displayed
- ▶ Enter the depth of the **Finish Pass**, or leave blank if no finish pass is desired

> The **Finish Pass** is in addition to the number of normal passes entered, and is included in the total cut depth

- ▶ Enter the number of threads per inch in the **Threads TPI** field

or

- ▶ Press the **TPI/pitch** soft key
- ▶ Enter the **Threads pitch** in mm

The **Thread Side** field displays whether the thread is **Inside** or **Outside**.

- ▶ Press the **enter** key to save the settings and exit the **Thread Cycle** form
- > The **Thread Cycle** program will display
- ▶ Press the **C** key to return to the DRO screen

Additional soft keys available while in the **Thread Cycle** form:

Function	Soft Key
Teach	Press the **Teach** soft key to set the start and end points
Calc	Press the **Calc** soft key to display the calculator functions
Help	Press the **Help** soft key for additional information about the **Thread Cycle** feature

Thread Cycle program

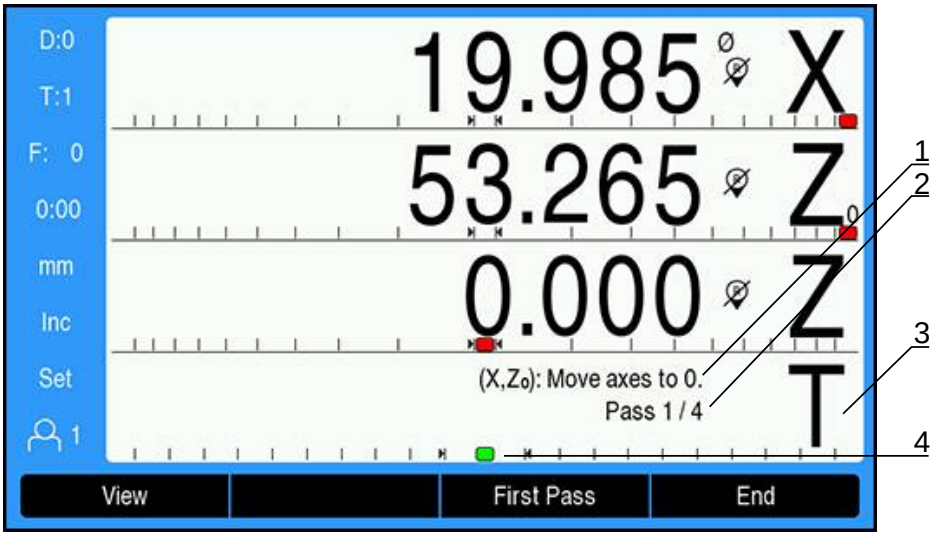

1 Instructional message
2 Pass number
3 Thread Bar display area
4 Thread Bar graphic positioning aid

While running a **Thread Cycle**, an instructional message and the **Pass** number display in the Thread Bar display area. The Thread Bar graphic positioning aid displays the rotation of the leadscrew relative to an established mark. This mark is established when the **First Pass** is initially executed. All subsequent passes can now be engaged using the Thread Bar graphic positioning aid when located at the center mark.

The following soft keys are available while running a **Thread Cycle** program:

Function	Soft Key
View	Press the **View** soft key to view the actual tool location during machining
First Pass	Press the **First Pass** soft key to start the first pass
Next Pass	Press the **Next Pass** soft key to display the next instruction
Start Pass	Press the **Start Pass** soft key to start the next pass
Previous Pass	Press the **Previous Pass** soft key to restart the procedure
Finish Pass	Press the **Finish Pass** soft key to start the last programmed pass
End	Press the **End** soft key to exit the program and return to the DRO screen

To run a **Thread Cycle** program:

- ▶ Start the spindle
- ▶ Press the **Thread Cycle** soft key to open the form
- ▶ Once all data is defined, press the **enter** key to start the program
- > The message **Move axes to 0.** is displayed
- ▶ Move the longitudinal axis to zero
- ▶ Move the cross feed axis to zero
- > The message **Press First Pass** is displayed

Running the **First Pass**

- ▶ Press the **First Pass** soft key
- > The message **Ready to engage thread lever** is displayed

> Do not move the carriage manually after pressing the **First Pass** soft key. Allow the leadscrew to move the carriage so the thread engagement location can be determined accurately.

- ▶ Watch the machine dial and engage the lever for the first pass on the appropriate number
- ▶ Keep your hand on the lever while the carriage is moving
- > The longitudinal axis will move towards zero

Running the remaining passes

- ▶ Disengage the lever and back off the cross feed at the same time when the DRO reads 0.0
- ▶ With the lever disengaged, press the **Next Pass** soft key
- ▶ Move the axes back to the start position. Move Z to 0.0, then move X to 0.0
- > The message **Press Start Pass** will display
- ▶ When ready, press the **Start Pass** soft key
- > The message **Engage Lever** will display
- ▶ Watch the Thread Bar Indicator and engage the lever when the indicator turns green
- ▶ Repeat this procedure until all normal passes are completed
- > If a finish pass step was created, the **Finish Pass** soft key will appear

Running the **Finish Pass**

- ▶ Press the **Finish Pass** soft key, and execute the same as the previous passes
- ▶ Press the **End** soft key to exit the program and return to the DRO screen

> If a false start occurs at any time, disengage the lever and back off the cross feed at the same time. Press the **Previous Pass** soft key to restart the procedure.

11

Programming

11.1 Overview

This feature is available on DRO 300 products only.

The basic machining operations available in the DRO mode (i.e. tool selection, preset, hole patterns) can also be used to create a program. A program is a sequence of one or more machining operations. Programs can be executed a number of times and saved for later use.

Each machining operation is a separate step in the program. A program can have up to 250 steps. The program listing shows the step numbers, and the associated machining operations.

Programs are saved to internal storage, which is not lost when power is off. The readout can hold up to 10 programs in internal storage. Programs can also be saved to external storage on a PC using the **Export** and **Import** functions.

Opening Program mode

To open **Program** mode:

- ▶ Press the **Program** soft key
- > A listing of the **Program** (or a blank listing) is displayed

11.2 Creating a new Program

To create a new **Program**:

- ▶ Highlight the program number where you want to make a new program
- > If the program number is available the **New** soft key will be displayed
- ▶ Press the **New** soft key
- ▶ Enter a **Program Name**
- ▶ Press the **Save** soft key
- ▶ The new **Program** is created and the first step in the program is shown highlighted

11.3 Creating features in a program

Features are inserted into a **Program** and are used to create steps in the **Program**.

To access the available **Features**:

- ▶ Press the **Features** soft key
- > The following **Features** are available:
  - **Tool**
  - **Datum**
  - **Preset**
  - **Position**
  - **Circle Pattern**
  - **Linear Pattern**
- ▶ Press the **left** or **right arrow** key to toggle through the soft keys

11.3.1 Creating a Tool step

The **Tool** step is used to select the tool, from the **Tool Table**, that will be used by the subsequent steps in the program.

To select a **Tool**:

- ▶ Press the **Tool** soft key
- ▶ Highlight the desired **Tool** in the **Tool Table**
- ▶ Press the **Use** soft key
- > The step that was highlighted in the program will become a **Tool** step

11.3.2 Creating a Datum step

The **Datum** step is used to select the datum to be used by subsequent steps in the program.

To select a **Datum**:

- ▶ Press the **Datum** soft key
- ▶ Enter the desired **Datum** number
- ▶ Press the **enter** key
- > The step that was highlighted in the program will become a **Datum** step

11.3.3 Creating a Preset step

The **Preset** step is used to enter the nominal (target) position to move to from within a program.

To enter a **Preset**:

- ▶ Press the **Preset** soft key
- ▶ Select the desired information
- ▶ Press the **enter** key
- > The step that was highlighted in the program will become a **Preset** step

11.3.4 Creating a Position step

This feature is available in the **Mill** application only.

The **Position** step is used to enter the nominal (target) position to move to "for the machine and tool axes" (X, Y, & Z) from within a program.

To create a **Position** step:

- ▶ Press the **Position** soft key
- ▶ Enter the nominal positions for the machine axes
- ▶ Enter the depth for the tool axis (optional)
- ▶ Press the **enter** key
- > The step that was highlighted in the program will become a **Position** step

11.3.5 Creating a Circle Pattern step

This feature is available in the **Mill** application only.

The **Circle Pattern** step is used to specify the parameters of a circle pattern from within a program.

To create a **Circle Pattern** step:

- ▶ Press the **Circle Pattern** soft key
- ▶ Press the **up** or **down arrow** keys to select the desired pattern
- ▶ Press the **Use** soft key
- > The step that was highlighted in the program will become a **Circle Pattern** step

Modifying a pattern

To modify the selected pattern:

- ▶ Press the **enter** key

or

- ▶ Press the **Edit** soft key
- ▶ Enter the new pattern parameters in the **Circle Pattern** form
- ▶ Press the **enter** key

11.3.6 Creating a Linear Pattern step

This feature is available in the **Mill** application only.

The **Linear Pattern** step is used to specify the parameters of a linear pattern from within a program.

To create a **Linear Pattern** step:

- ▶ Press the **Linear Pattern** soft key
- ▶ Press the **up** or **down arrow** keys to select the desired pattern
- ▶ Press the **Use** soft key
- > The step that was highlighted in the program will become a **Linear Pattern** step

Modifying a pattern

To modify the selected pattern:

- ▶ Press the **enter** key

or

- ▶ Press the **Edit** soft key
- ▶ Enter the new pattern parameters in the **Linear Pattern** form
- ▶ Press the **enter** key

11.4 Editing steps

Selecting a step

To select a specific step in the program:

- ▶ Use the numeric keypad and enter the desired step number (ex. 5)
- ▶ Press the **enter** key
- > The highlighted step is moved to the desired position in the program

Inserting a step

To insert a step:

- ▶ Highlight the step below where you want to insert the new step
- ▶ Press the **Features** soft key
- ▶ Select the desired feature
- > The highlighted step and all of the following steps are shifted down one step in the program listing, and the new step is inserted at the highlighted step

Editing a step

To edit a step:

- ▶ Highlight the step you would like to edit
- ▶ Press the **enter** key
- ▶ The options for the highlighted step are displayed and can be edited

Clearing a step

To clear a step from the program:

- ▶ Highlight the step you would like to clear
- ▶ Press the **Clear** soft key
- > A pop-up warning informs you that the current step will be cleared from the program

> When a step is cleared from the program, all of the steps following the cleared step are shifted up one step in the listing

- ▶ Press the **enter** key to clear the step from the program
- ▶ or
- ▶ Press the C key to cancel

Exploding a step

A **Circle Pattern** or a **Linear Pattern** step can be expanded into individual **Position** steps.

To **Explode** a step:

- ▶ Highlight a **Circle Pattern** or a **Linear Pattern** step
- ▶ Press the **Explode** soft key
- > The pattern is expanded in the **Program** into individual **Position** steps. All of the following steps are shifted down in the program listing.

11.5 Editing a Program

To edit a **Program**:

- Highlight the **Program** you want to edit
- Press the **Edit** soft key
- Edit the steps in the **Program** you would like to change

Further information: "Editing steps", Page 151

> Changes are automatically saved in the **Program**

11.6 Opening the graphical view

The **View** soft key is used to toggle between the program listing with the DRO (Absolute) positions and a graphical view of the part program.

When **Program** mode is selected, the view defaults to the program listing view.

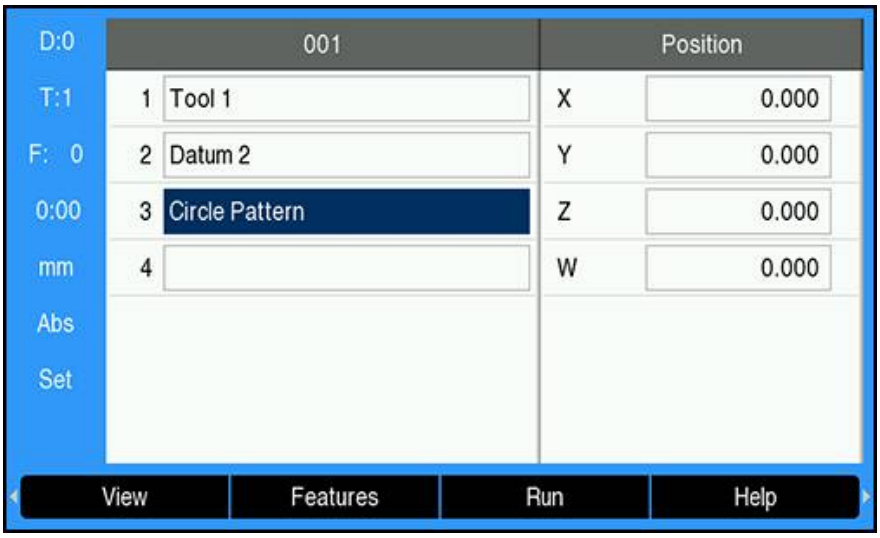

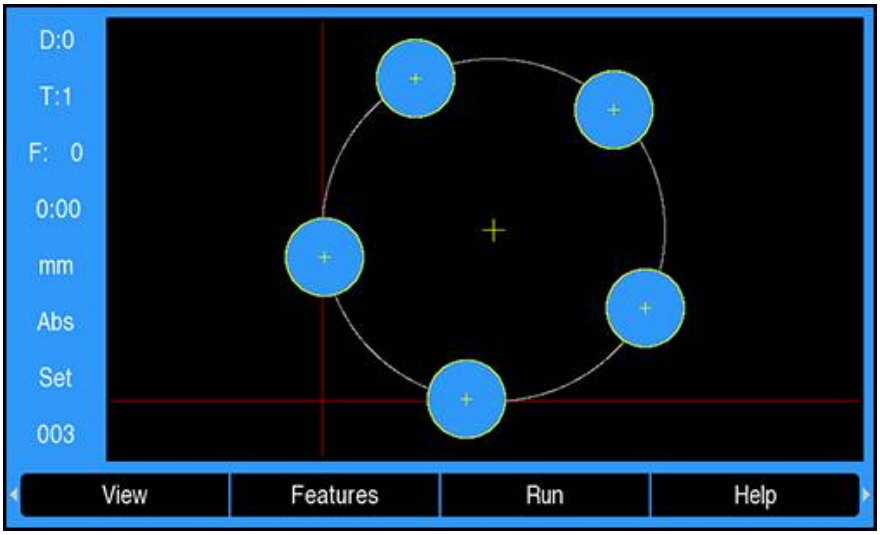

Graphical view features:

- **Datum**, **Position**, **Circle Pattern**, and **Linear Pattern** steps have a graphical view
- Features of the part are scaled to the size of the window
- The datum is drawn as a vertical and horizontal line representing the (0,0) location
- The position and holes of a hole pattern are drawn as circles
- The diameter of the programmed tool is used to draw the holes

Opening the graphical view

To open the graphical view:

- Press the **View** soft key

11.7 Running a program

To run a program:

- Use the **up** or **down arrow** keys to highlight the program step to begin running
- or
- Use the numeric key pad to select the program step to begin running
- Press the **Run** soft key

> The Distance-To-Go view is displayed and the **Run** soft keys are shown. The number of the current step being executed is also displayed on the status bar.

The following soft keys are available when running a program:

Soft key	Function
View	Press the **View** soft key to see the graphical view of a circle or linear pattern that is being run
Previous	Press the **Previous** soft key to go to the previous step or hole in a program
Next	Press the **Next** soft key to go to the next step or hole in a program
End	Press the **End** soft key to end running a program

12

Measured value output

12.1 Overview

This feature is available on DRO 300 products only.

The remote switch (pendant or footswitch) will transmit the currently displayed values in either Actual Value or Distance-To-Go mode, whichever is currently visible.

12.2 Data output using an edge finder

In the next three examples, measured value output is started with a switching signal from the edge finder. Data output to a USB mass storage device can be turned on, or off in the **Measured value out.** settings.

Further information: "Measured value out.", Page 90

Example 4

Probing function Edge Y = –3674.4498 mm

Y		:	-	3674	.	4498		R	<CR>	<LF>
1	**2**	**3**	**4**	**5**	**6**	**7**	**8**	**9**	**10**	**11**

1 Coordinate axis
2 (2) Blank Spaces
3 Colon
4 +/– sign, or Blank Space
5 2 to 7 places before the decimal point
6 Decimal point
7 1 to 6 places after the decimal point
8 Unit: blank space for mm, " for inches
9 **R** for radius, **D** for diameter display
10 Carriage return
11 Blank line (Line Feed)

Example 5

Probing function Centerline

Coordinate of centerline on X axis CLX = + 3476.9963 mm (**C**enter **L**ine **X** axis)

Distance between the probed edges DST = 2853.0012 mm (**Dist**ance)

CLX	:	+	3476	.	9963		R	<CR>	<LF>
DST	:		2853	.	0012		R	<CR>	<LF>
	1	**2**	**3**	**4**	**5**	**6**	**7**	**8**	**9**

1 Colon
2 +/– sign, or Blank Space
3 2 to 7 places before the decimal point
4 Decimal point
5 1 to 6 places after the decimal point
6 Unit: blank space for mm, " for inches
7 **R** for Radius, **D** for Diameter display
8 Carriage return
9 Blank line (Line Feed)

Example 6

Probing function Circle Center

First center point coordinate, e.g. CCX = –1616.3429 mm. Second center point coordinate, e.g. CCY = +4362.9876 mm, (**C**ircle **C**enter **X** axis, **C**ircle **C**enter **Y** axis; coordinates depend on working plane).

Circle diameter DIA = 1250.0500 mm

CCX	:	-	1616	.	3429		R	<CR>	<LF>
CCY	:	+	4362	.	9876		R	<CR>	<LF>
DIA	:		1250	.	0500		R	<CR>	<LF>
	1	**2**	**3**	**4**	**5**	**6**	**7**	**8**	**9**

1 Colon
2 +/– sign, or Blank Space
3 2 to 7 places before the decimal point
4 Decimal point
5 1 to 6 places after the decimal point
6 Unit: blank space for mm, " for inches
7 **R** for Radius, **D** for Diameter display
8 Carriage return
9 Blank line (Line Feed)

13

External operation

13.1 External operation

The product can be operated over the USB data interface from a host application. Special commands available: <Ctrl>B 'Send Current Position', <Ctrl>P 'Send Screen Capture'.

The following key commands are available:

Format	
<ESC>TXXXX<CR>	Key is pressed
<ESC>AXXXX<CR>	Output of screen contents
<ESC>SXXXX<CR>	Special functions

Sequence of commands	Function
<ESC>T0000<CR>	**0** key
<ESC>T0001<CR>	**1** key
<ESC>T0002<CR>	**2** key
<ESC>T0003<CR>	**3** key
<ESC>T0004<CR>	**4** key
<ESC>T0005<CR>	**5** key
<ESC>T0006<CR>	**6** key
<ESC>T0007<CR>	**7** key
<ESC>T0008<CR>	**8** key
<ESC>T0009<CR>	**9** key
<ESC>T0100<CR>	**C** key
<ESC>T0101<CR>	**+/-** key
<ESC>T0102<CR>	**.** (decimal) key
<ESC>T0104<CR>	**enter** key
<ESC>T0109<CR>	Axis Key 1
<ESC>T0110<CR>	Axis Key 2
<ESC>T0111<CR>	Axis Key 3
<ESC>T0112<CR>	Axis Key 4 (Available on DRO 304 products only)
<ESC>T0114<CR>	Soft key 1
<ESC>T0115<CR>	Soft key 2
<ESC>T0116<CR>	Soft key 3
<ESC>T0117<CR>	Soft key 4
<ESC>T0135<CR>	Left arrow key
<ESC>T0136<CR>	Right arrow key
<ESC>T0137<CR>	Up arrow key
<ESC>T0138<CR>	Down arrow key
<ESC>A0000<CR>	Send device identification
<ESC>A0200<CR>	Send actual position

Sequence of commands	Function
<ESC>S0000<CR>	Reset device
<ESC>S0001<CR>	Lock keypad
<ESC>S0002<CR>	Release keypad

14

Operating the IOB 610

14.1 Setup

When an IOB 610 is connected to a DRO 300 product, Spindle functions for **Mill** applications or Constant Surface Speed **CSS** functions for **Turn** applications, are available.

Configuring the DRO

- ▶ Connect the IOB 610 to a DRO 300 product
- > The DRO will automatically recognize when the IOB is connected

Further information: "Connecting an accessory", Page 41

- ▶ Configure the product for **Mill** applications to use **Spindle Settings** and **Switching Outputs** options

Further information: "Readout Settings", Page 79

- > The **Spindle Settings** and the **Switching Outputs** menus will display under **Installation Setup**

or

- ▶ Configure the product for **Turn** applications to use **CSS Settings** and **Switching Outputs** options

Further information: "Readout Settings", Page 79

- > The **CSS Settings** and the **Switching Outputs** menus will display under **Installation Setup**

14.2 Switching functions

Switching Outputs cannot be used for coupled axes or for axes with backlash compensation.

14.2.1 Switching inputs

The IOB 610 provides four inputs that are used to zero the actual value of the assigned axis. A low-to-high transition at the input causes the value for that axis to be set to zero.

14.2.2 Switching Outputs

Switching Outputs consist of integrated relays available for generic use. The number of outputs available is dependent on the configuration options chosen:

Mill Application

- 10 **Switching Outputs** are available when **Spindle Speed** control (**rpm**) is **Disabled**
- 5 **Switching Outputs** are available when **rpm** is **Enabled**

Further information: "Spindle Speed control settings", Page 171

Turn Application

- 10 **Switching Outputs** are available when constant surface speed (**CSS**) is **Disabled**
- 5 **Switching Outputs** are available when **CSS** is **Enabled**

Further information: "CSS control settings", Page 180

Output settings

Switching Outputs can be configured to activate when a position display reaches a specific value or within a specified range of zero.

Accessing the Switching Outputs table

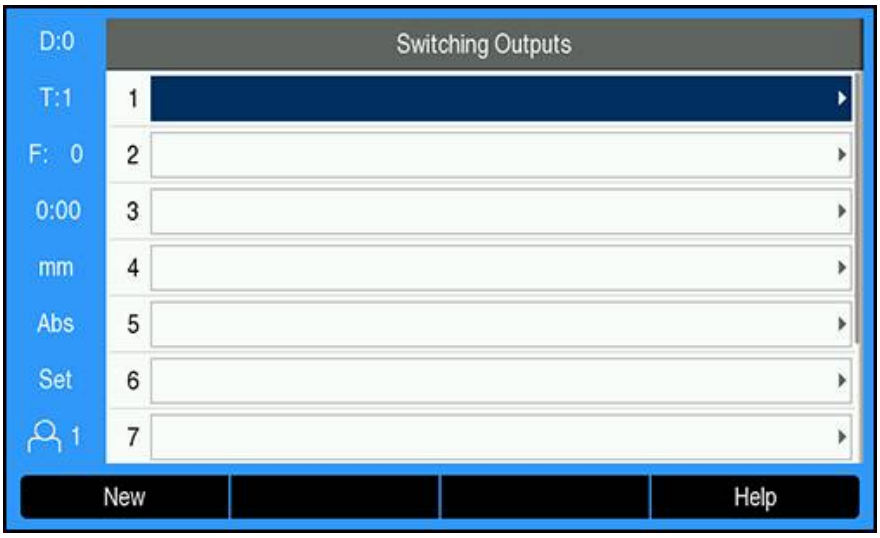

To access the **Switching Outputs** settings:

- Press the **Setup** soft key
- Open in sequence:
  - **Installation Setup**
  - **Switching Outputs**

> The **Switching Outputs** table which stores output configurations will be displayed

Configuring an output

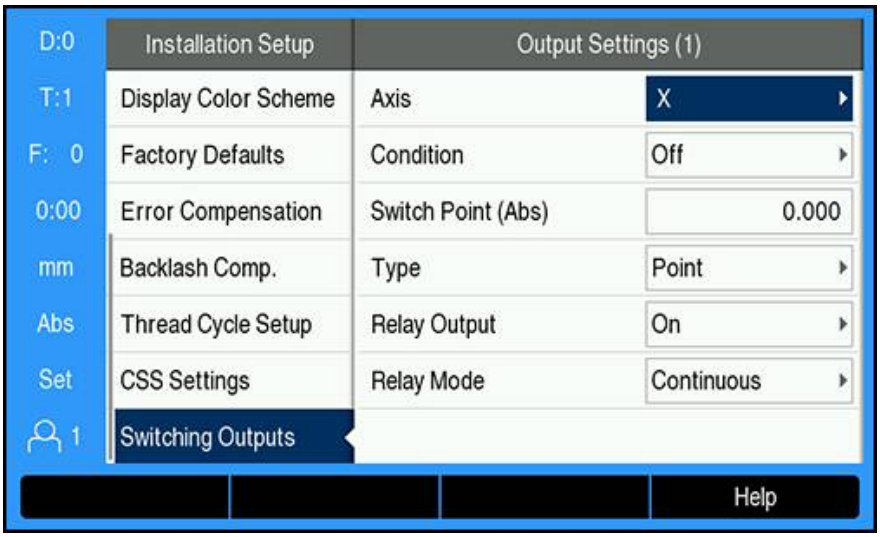

To set or change the configuration of an output:

- ▶ Select the output using the **arrow** keys or the **numeric** keypad
- ▶ Press the **enter** key
- > The **Output Settings** options are displayed:
- ▶ Assign an **Axis** to the output
- ▶ Select the required **Condition** at which the relay is activated:
  - **Off**
  - **<**
  - **<=**
  - **>=**
  - **>**
- ▶ Select the **Switch Point** to specify the axis position by pressing the **Abs/Inc** soft key and set the position display value using the **numeric** key pad
  - **Abs** (Actual Value)
  - **Inc** (Distance-To-Go)
- ▶ Select the settings **Type**:
  - **Point** on the axis
  - **Range** about zero
- ▶ Select the **Relay Output** to turn the relay **On** or **Off** when the switching condition is met
- ▶ Select the **Relay Mode** to activate a cycle:
  - **Continuous**
  - **Pulse**

In **Pulse** mode, the relay is activated (**On** or **Off**) for a specified period of time. After the period has timed out, the relay is deactivated. The pulse time can be set to 0.1 to 999.9 seconds.

The time period begins whenever the switching condition transitions from "false" to "true" . If the switching conditions transitions to "true" before the period has timed out, the timer will start over.

Relay modes

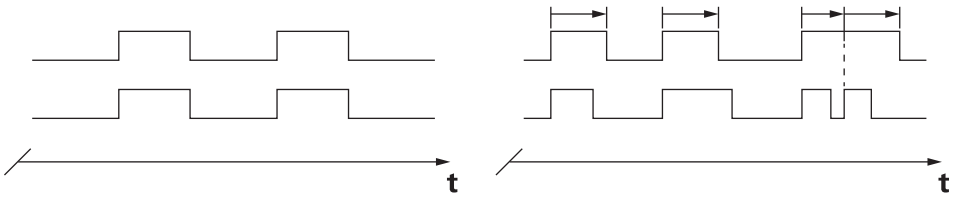

Continuous mode

Pulse mode

Possible switching states of relays

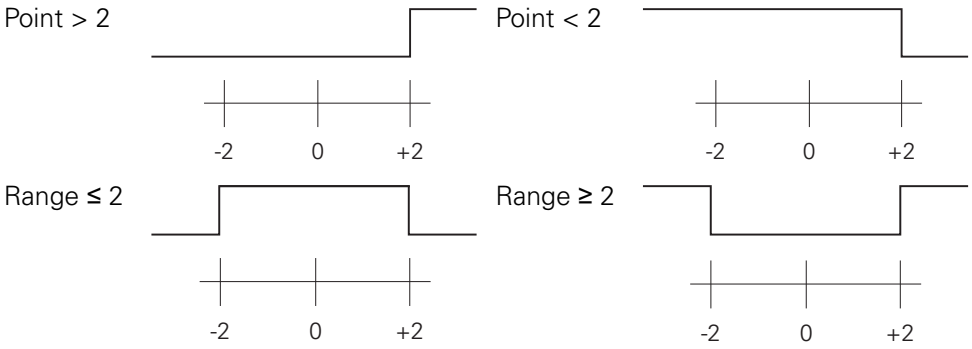

Clearing an output

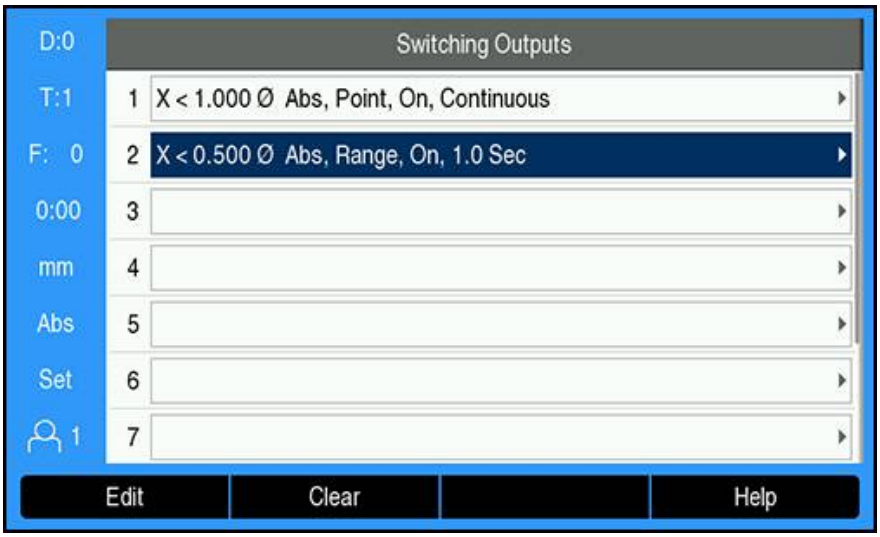

To clear an output:

- Highlight the switching output relay that is to be cleared by using the **arrow** keys or the **numeric** keypad
- Press the **Clear** soft key
- Press the **enter** key to confirm

> The output relay settings will be cleared

14.3 Spindle Speed control

> **Spindle Speed** control is only available for milling systems. If the DRO 300 is configured for a turning system, then no **Spindle Settings** will be displayed.

> The **Spindle Settings** option in the **Installation Setup** menu will only appear if the IOB 610 is detected.

Spindle Speed control is used to automatically set the spindle speed on a mill.

14.3.1 Installation Setup

> In order to use the **Spindle Speed** control, the DRO must be set to **Mill**, the last axis must be configured as a **Rotary** encoder, the last display must be set to **Speed (rpm)**, and the **Status** setting must be set to **Enabled**.

To set the DRO to **Mill Application**, refer to the "Configuring the DRO" section in the manual.

Further information: "Setup", Page 164

To set the **Encoder Type** to **Rotary**:

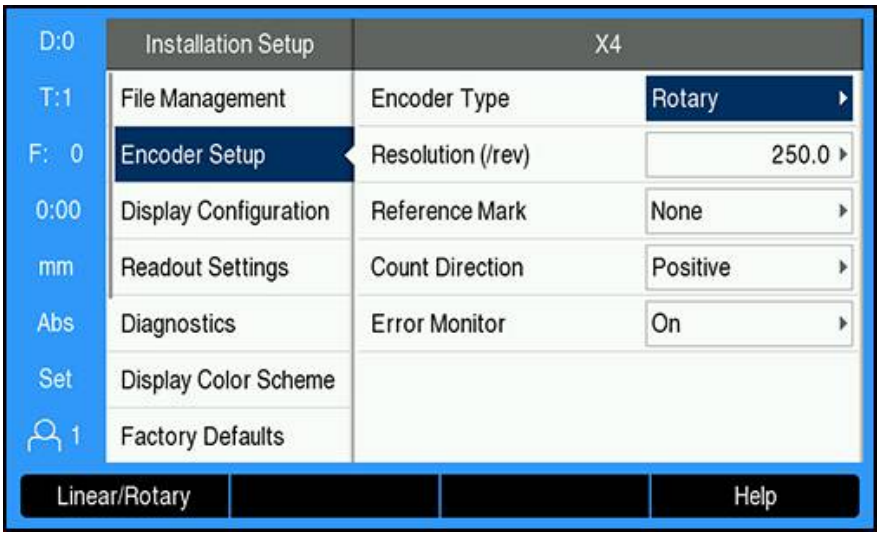

- Press the **Setup** soft key
- Open in the sequence:
  - **Installation Setup**
  - **Encoder Setup**
  - The last encoder
  - **Encoder Type**
- Select **Rotary**
- Press the **enter** key to save the setting

To set the **Display Configuration** to **Speed (rpm)**:

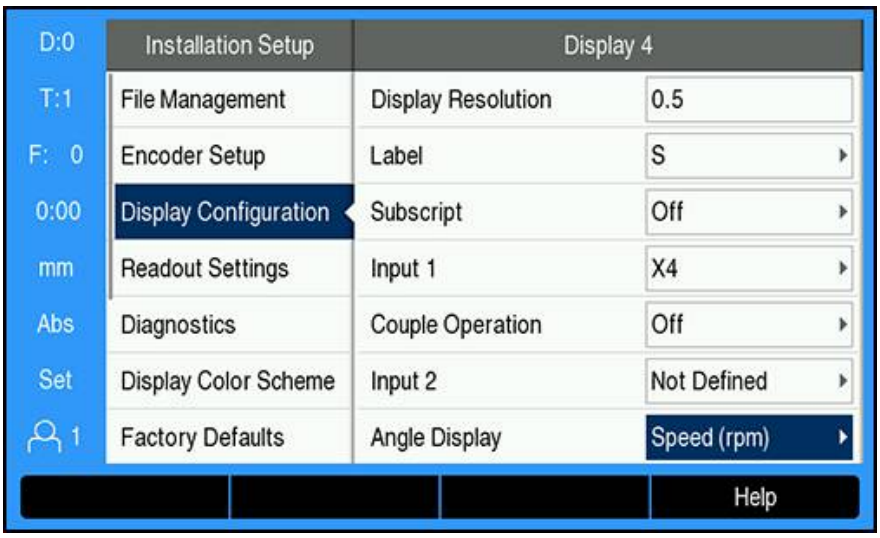

- Return to the **Installation Setup** screen
- Open in the sequence:
  - **Display Configuration**
  - The last display
  - **Angle Display**
- Select **Speed (rpm)**
- Press the **enter** key to save the selection

To set the **Spindle Speed** control to **Enabled**:

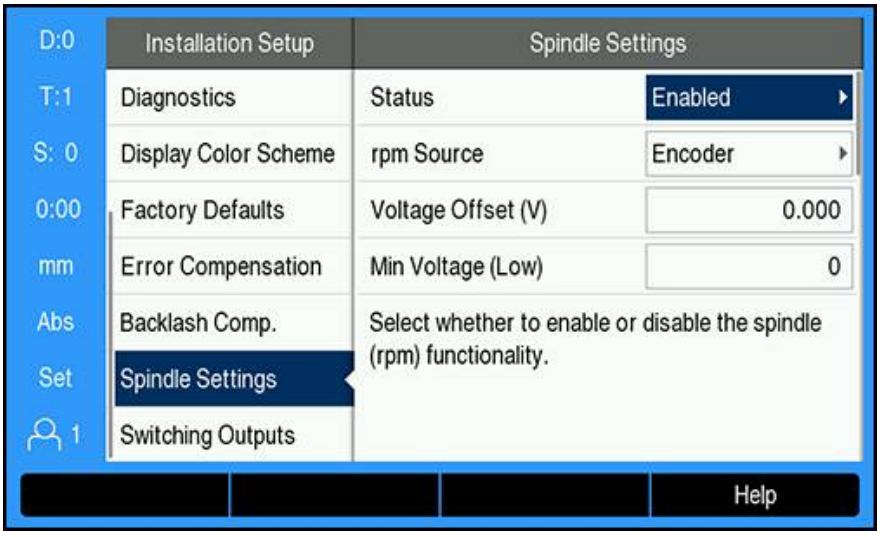

- Return to the **Installation Setup** screen
- Open in the sequence:
  - **Spindle Settings**
  - **Status**
- Select **Enabled**
- Press the **enter** key to save the selection

or

- Press the **C** key to cancel and return to the previous screen without saving changes

14.3.2 Spindle Speed control settings

To configure the **Spindle Speed** control settings:

- Press the **Setup** soft key
- Open in the sequence:
  - **Installation Setup**
  - **Spindle Settings**
- Press the **up** or **down arrow** keys to select a setting

> Additional settings that are not initially visible on the **Spindle Settings** form must be accessed using the **down arrow** key.

- Select the **Status** of the spindle (rpm) functionality:
  - **Enabled**
  - **Disabled**
- Select the **rpm Source**:
  - **Encoder**
  - **Calculated**: the software will calculate the speed as a replacement for a rotary encoder

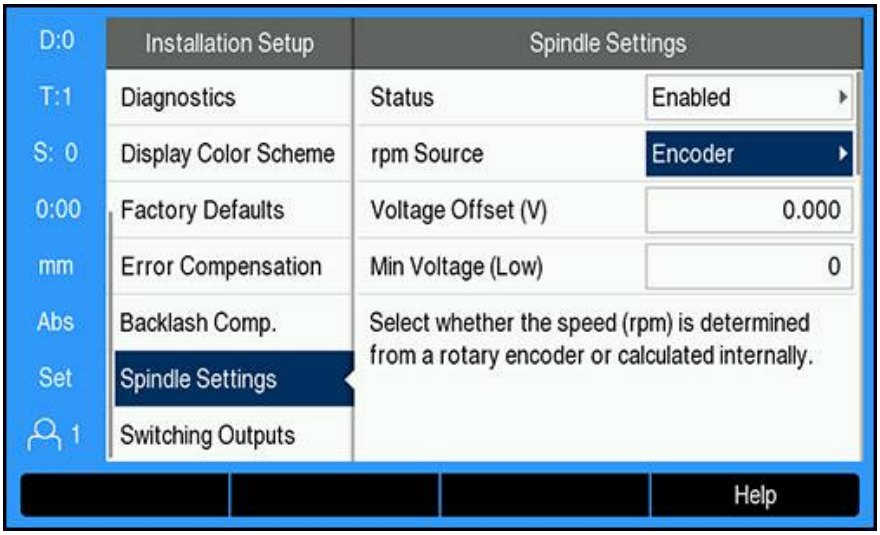

- Enter the **Voltage Offset** which is added to the calculated DAC output to adjust for any inherent offset in the DAC output.

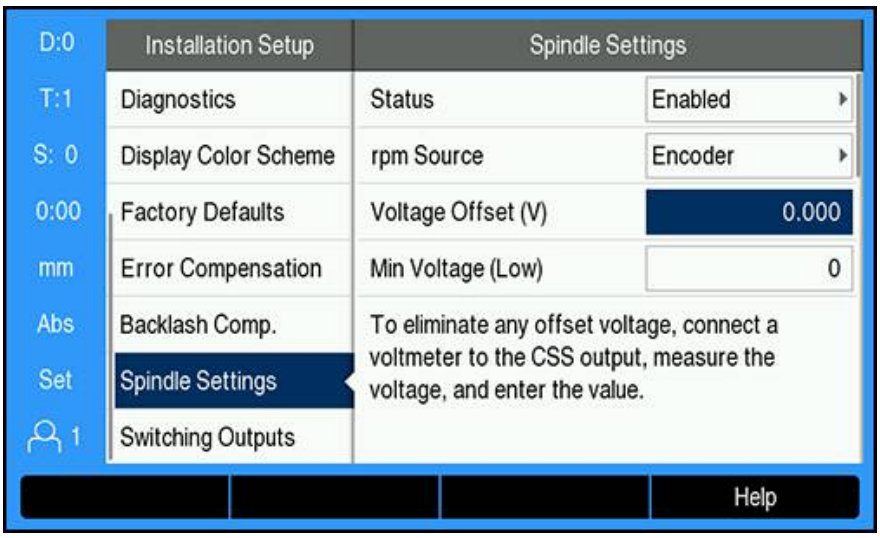

To determine the **Voltage Offset**:

- Measure the actual voltage at the DAC output using a voltmeter
- Enter the opposite of the actual voltage in the **Voltage Offset** setting to adjust for any offset and bring the DAC output back to 0 V

The **Voltage Offset** setting range is limited to -0.2 V to +0.2 V

- Enter the **Min and Max Voltage** to establish the relationship between the DAC output signal (+0 V to +10 V) and the spindle speed for each gear (**Low** and **High**)

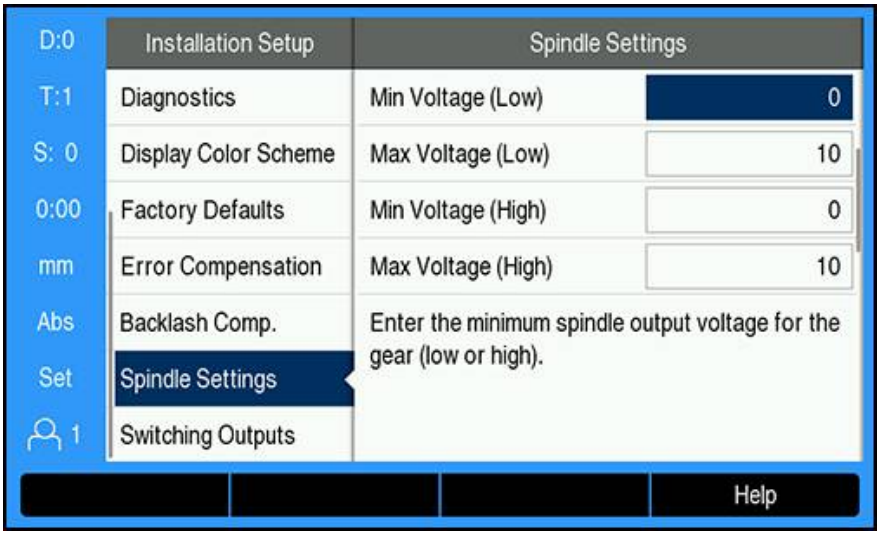

- Enter the **V - rpm** for each gear (Low and High)
- > The spindle speed will then be calculated using the DAC output S_{Out} linear relationship to determine the corresponding output voltage V_{Out} using the formula: $V_{Out} = 10 \bullet (S_{out} - S_0) / (S_{10} - S_0) + V_{Offset}$

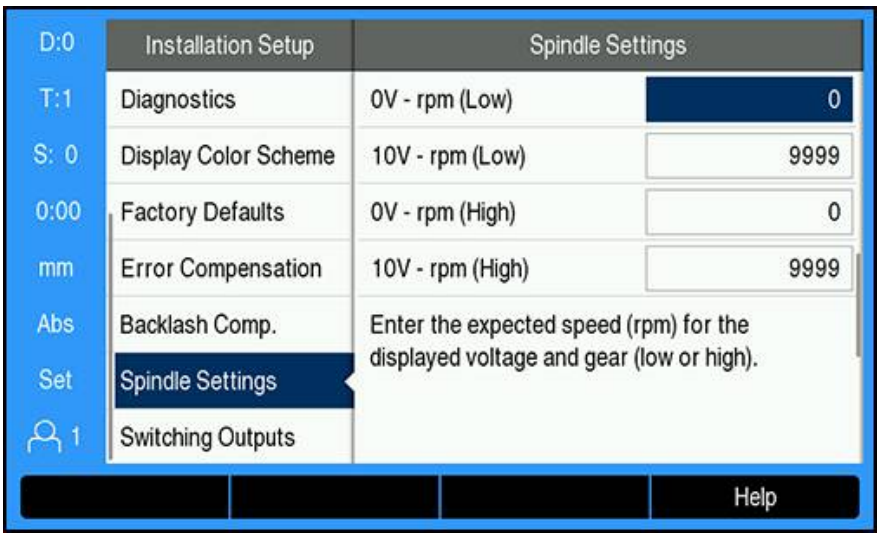

To determine the **V - rpm**:

- ▶ Enter the expected speed (rpm) for the displayed voltage and gear (Low and High) to set the physical limits of the machine
- > The **S:** field on the status bar will display the current spindle speed in rpm
- ▶ Enter the **Min** and **Max Run rpm** allowed for each gear (Low and High)

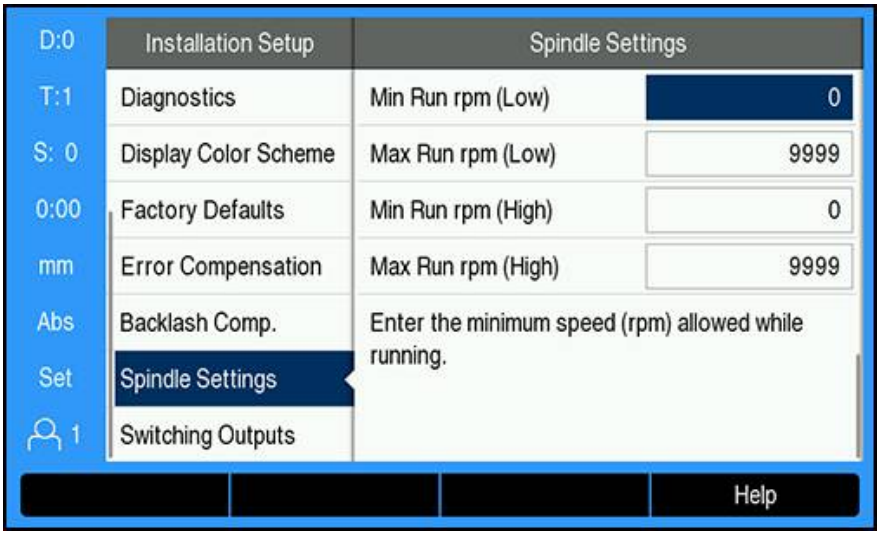

- ▶ Press the **enter** key to save the settings and exit the form

or

- ▶ Press the **C** key to exit without saving the changes

14.3.3 Spindle Speed control operation

To operate the **Spindle Speed** control, the spindle parameters in the **Tool Table** menu must be programmed.

Accessing the Tool Table

To access the **Tool Table** and enter **Tool** specifications:

- Press the **Tool** soft key
- Use the **up** or **down arrow** key to highlight the desired tool

or

- Use the **numeric** keypad to enter the tool number

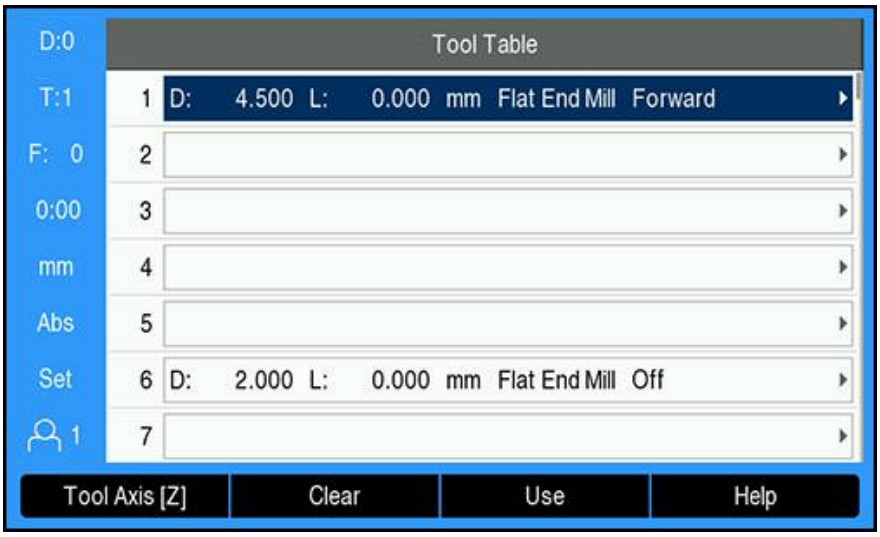

- Press the **enter** key to display the **Tool** form for the selected tool

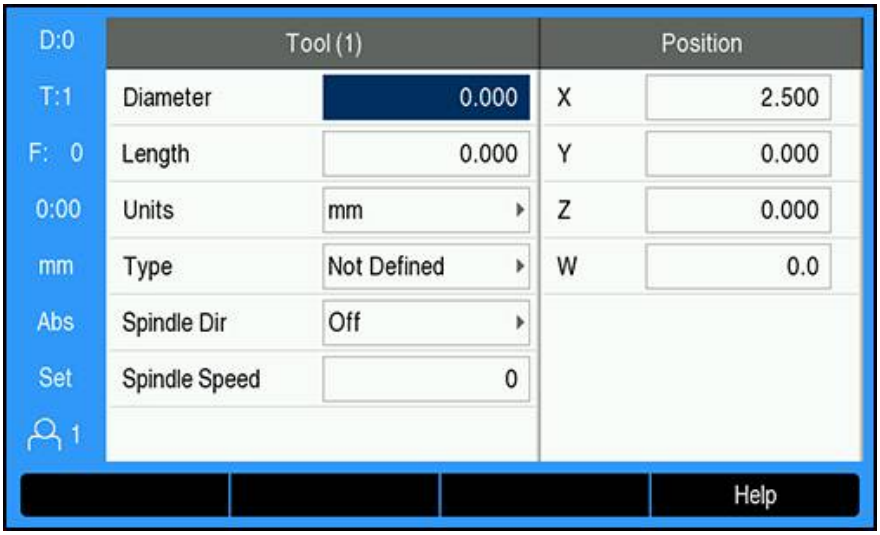

- Enter the **Diameter** of the tool
- Select a **Spindle Dir** direction
  - **Forward**
  - **Reverse**
- Enter the **Spindle Speed**

or

- Calculate using the **rpm** calculator

Calculating the Spindle Speed

To automatically calculate the **Spindle Speed**:

- Use the **down arrow** key to highlight **Spindle Speed**
- Press the **rpm** soft key

> The **rpm** calculator menu is displayed

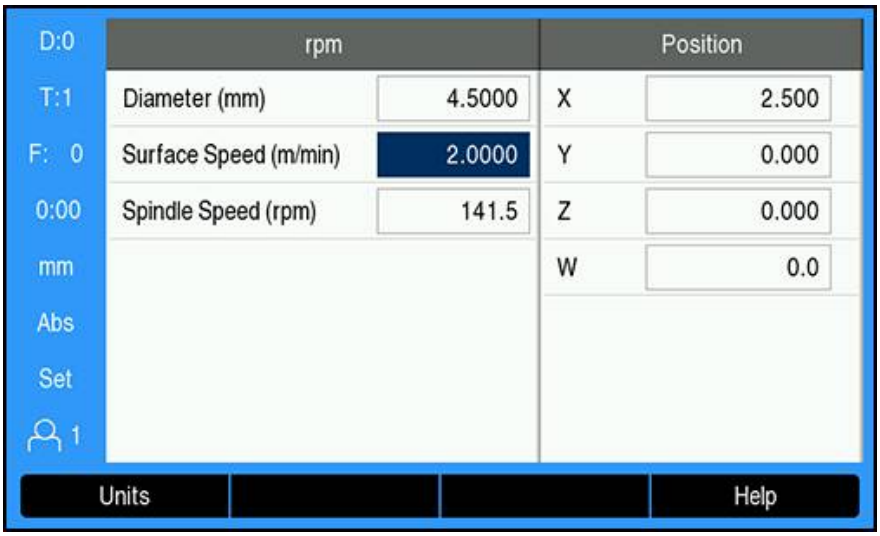

If a **Diameter** was previously entered in the **Tool** menu, this value will display. If the **Diameter** displays a value of 0:

- Enter the tool **Diameter**
- Press the **enter** key to save the setting
- Enter the **Surface Speed**
- Press the **enter** key to save the setting

> The **Spindle Speed** is calculated and automatically loads into the tool table when exiting the **rpm** calculator

- Exit the **rpm** calculator by pressing the **C** key

> The **Tool** form for the selected tool is displayed

- Press the **enter** key to return to the **Tool Table** menu

Using the Spindle Speed control

To use the **Spindle Speed** control:

- Define all tool and spindle parameters in the **Tool Table** menu
- Highlight the **Tool** to be used in the **Tool Table**
- Press the **Use** soft key
- Toggle the **Spindle On/Off** soft key which is displayed on the fourth page of the soft key menu to **On**
- Adjust the **Spindle Speed** by using the **Speed +** and the **Speed -** soft keys

Using the Spindle Speed control within a program

Spindle Speed control can be used within a program for any program step that has a mill spindle tool defined for that step.

To use **Spindle Speed** control when running a program:

- Define the **Spindle Dir** and **Spindle Speed** fields for the tool

> When the **Spindle Dir** and **Spindle Speed** fields have not been defined, the spindle control soft keys are not available

- When in program run, use the **left** or **right arrow** keys to display the spindle control soft keys (**Spindle Setup** and **Spindle On/Off**)
- Adjust the **Spindle Speed** by using the **Speed +** and the **Speed -** soft keys
- To return to the program soft keys from the spindle control, press the **left** or **right arrow** keys

14.4 Constant surface speed control

The constant surface speed (**CSS**) control is only available for lathe (turning) systems. If the DRO 300 is configured for a milling system, then no **CSS Settings** will be displayed.

The **CSS Settings** option in the **Installation Setup** menu will only appear if the IOB 610 is detected.

The constant surface speed (**CSS**) mode maintains a constant surface cutting speed on a lathe.

The following functions are available:

- **CSS** mode: The DAC output signal provides constant surface speed by adjusting the spindle speed as the diameter (radius) of the workpiece changes
- Direct entry of spindle speed: The DAC output signal sets the spindle speed based on the value entered via the numeric keypad
- Speed limits: The user may set a safe operating range (minimum and maximum speeds) for spindle speed
- Gear selection: Four different gears can be specified for varying the relation between the actual speed and the DAC output signal

14.4.1 Installation Setup

> In order to use the **CSS** functionality, the DRO must be set to **Turn**, the last axis must be configured as a **Rotary** encoder, and the **Status** setting must be set to **Enabled**.

To set the DRO to **Turn Application**, refer to the "Configuring the DRO" section in the manual.

Further information: "Setup", Page 164

To set the **Encoder Type** to **Rotary**:

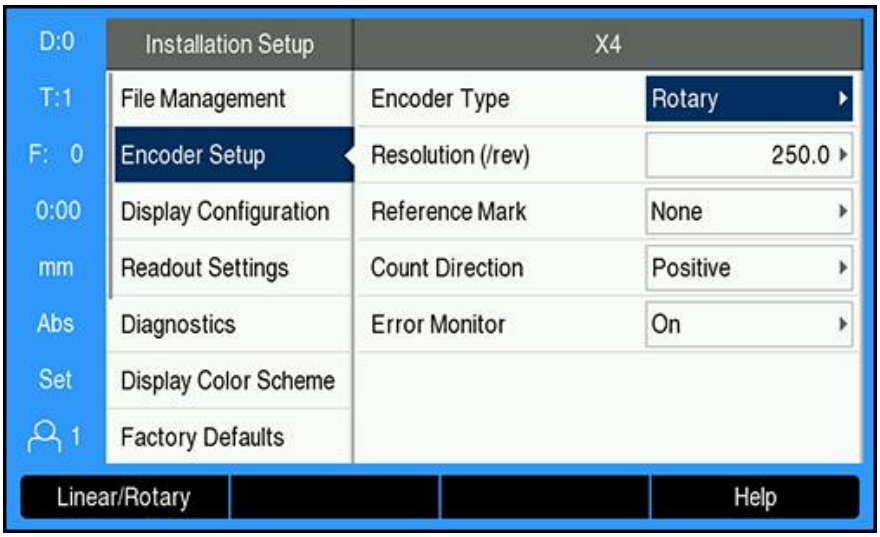

- Press the **Setup** soft key
- Open in the sequence:
  - **Installation Setup**
  - **Encoder Setup**
  - The last encoder axis
  - **Encoder Type**
- Select **Rotary**
- Press the **enter** key to save the setting

To set the **CSS** control to **Enabled**:

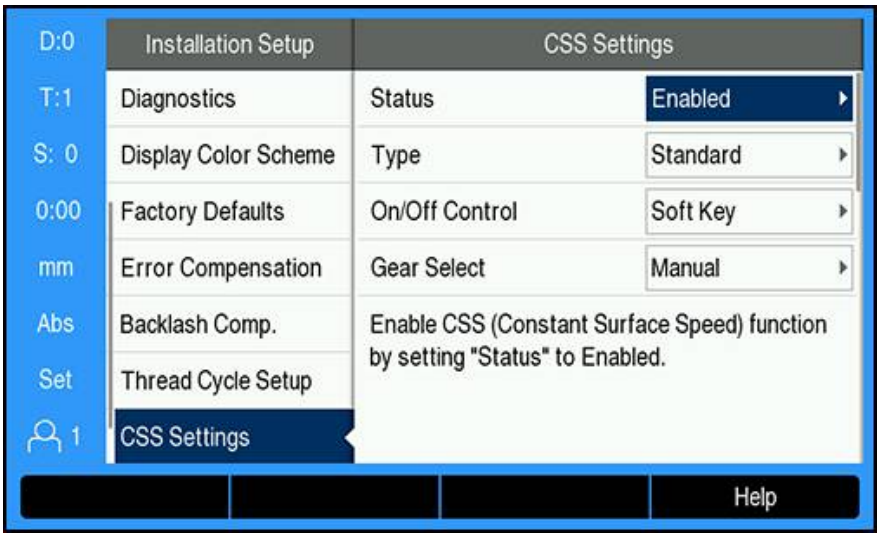

- Return to the **Installation Setup** screen
- Open in the sequence:
  - **CSS Settings**
  - **Status**
- Select **Enabled**
- Press the **enter** key to save the selection

or

- Press the **C** key to cancel and return to the previous screen without saving changes

14.4.2 CSS control settings

To configure the **CSS Settings**:

- Press the **Setup** soft key
- Open in the sequence:
  - **Installation Setup**
  - **CSS Settings**
- Press the **up** or **down arrow** keys to select a setting

> Additional settings that are not initially visible on the **CSS Settings** form must be accessed using the **down arrow** key.

- Select the **Status** of the **CSS** functionality:
  - **Enabled**
  - **Disabled**
- Select the **Type** of speed limit setting:
  - **Standard**: allows manual speed limit settings
  - **Limited**: restricts manual speed limit settings
- Select the **On/Off Control** setting to specify how the **CSS** is controlled:
  - **Soft Key**: controls the **CSS** from the readout soft keys
  - **External Signal**: controls the **CSS** through an external hardware signal
- Select the **Gear Select** setting to specify how the gear selection is controlled:
  - **Manual**: controls the gear selection through the **CSS/Direct rpm** form
  - **External Switch**: selects the current gear through external switches
- Enter the **Gear : rpm** which establishes the relationship between the DAC output signal and the spindle speed for each gear

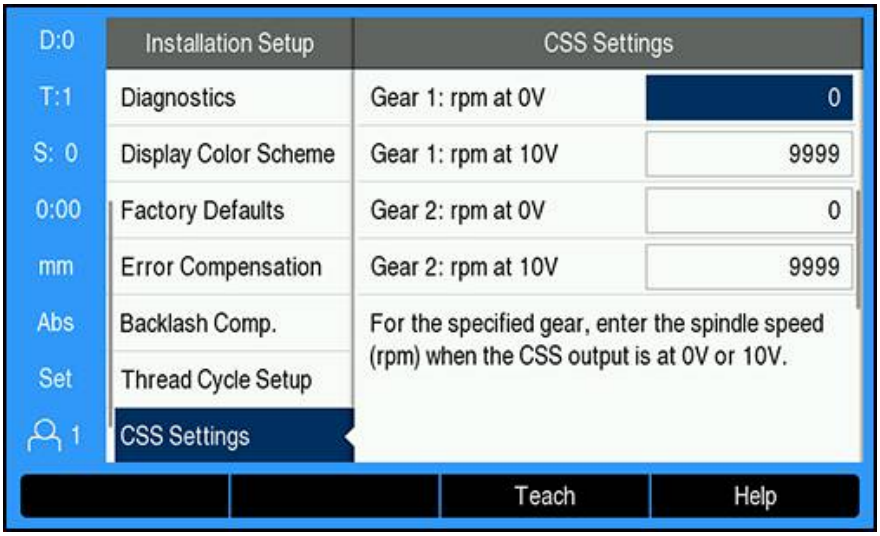

To determine the **Gear : rpm**:

- Enter the spindle speed (rpm) for each gear when the **CSS** output is at 0 V and at 10 V
- If the display configuration of the last axis is set to **Speed (rpm)**, the **rpm** fields in the **CSS Settings** form can be set to the current spindle speed by pressing the **Teach** soft key
- To set a specific spindle speed, the DAC output S_{Out} uses this linear relationship to determine the corresponding output voltage: $V_{Out} = 10 \bullet (S_{Out} - S_0) / (S_{10} - S_0) + V_{Offset}$
- Enter the **Voltage Offset** to adjust for any inherent offset in the DAC signal

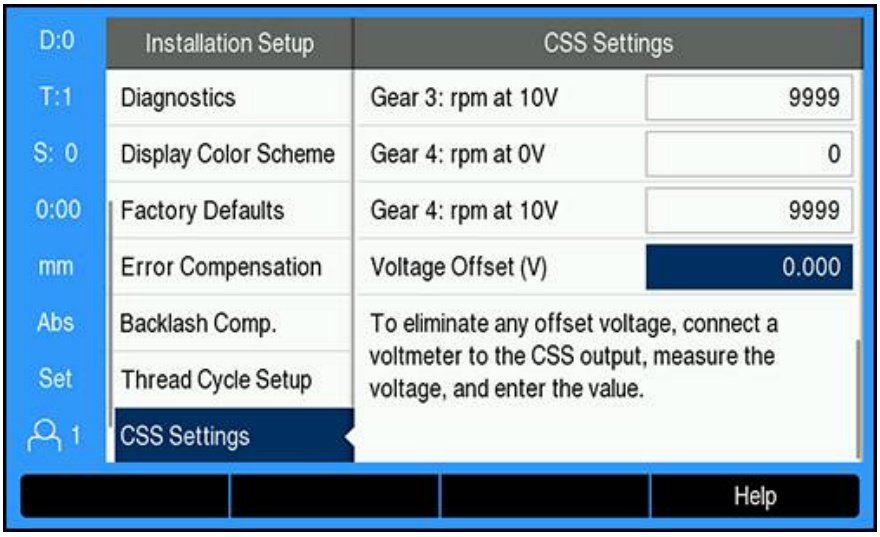

To determine the **Voltage Offset**:

- Measure the actual voltage at the DAC output using a voltmeter
- To adjust for any offset, enter the opposite of the actual voltage in the **Voltage Offset** setting to bring the DAC output back to 0 V. The offset range is limited to -0.2 V to +0.2 V.
- Press the **enter** key to save the settings and exit the form

or

- Press the **C** key to exit without saving the changes

14.4.3 CSS operation

> The **CSS/Direct rpm** setting will default to the **Off** position whenever the readout power is cycled and must be reselected in order to activate. No settings are lost when the power is cycled.

> If the **Gear Select** parameter in the **CSS Settings** menu is set to **External Switch**, the **Gear Selection** field in the **CSS/Direct rpm** menu will show the current gear selected based on external inputs and cannot be selected.

The operating parameters for **CSS** operating mode are set in the **CSS/Direct rpm** form.

To configure the **CSS/Direct rpm** control settings:

- Press the **CSS Setup** soft key to open the **CSS/Direct rpm** form

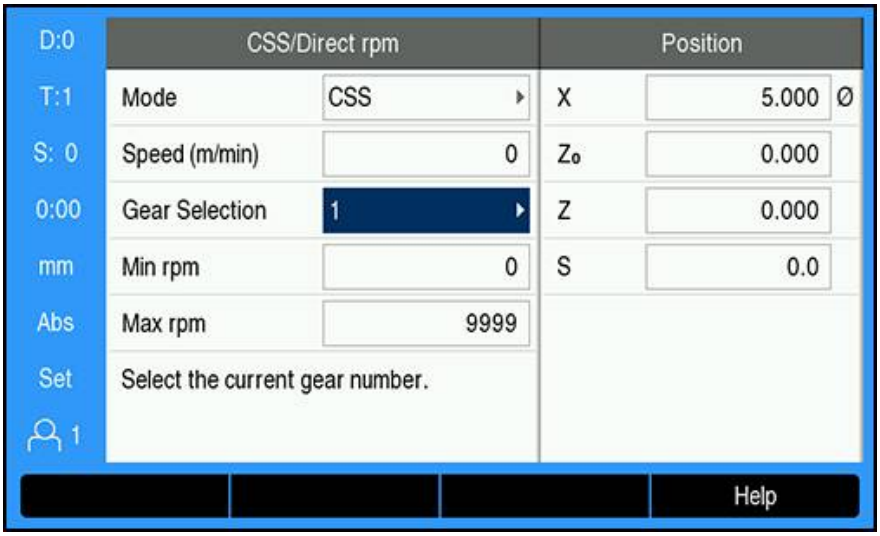

- Select the operating **Mode**:
  - **Off**: when the spindle control is not needed
  - **CSS** (constant surface speed): maintains a constant surface speed that is entered in the **Speed** field. As the diameter of the part changes, the spindle speed will be adjusted.
  - **rpm** (Direct rpm): sets a specific spindle speed by entering the speed in the **Speed** field
- Enter the **Speed (m/min)** by using the **numeric** keypad when **CSS Mode** is selected

or

- Enter the **Speed (rpm)** by using the **numeric** keypad when **rpm Mode** is selected
- Select the **Gear Selection** from the drop-down menu to manually choose which operating gear to use
- Enter the **Min rpm** and **Max rpm** by using the **numeric** keypad
- > This establishes the minimum and maximum rpm of the controlled spindle speed and the DAC output will not be set to a speed above or below these limits

- Press the **enter** key to save settings and exit the form

or

- Press the **C** key to exit without saving the changes

14.5 DAC output

> The **CSS On/Off** or the **rpm On/Off** soft key which enables **CSS** or **rpm** control will not appear if the operating **Mode** in the **CSS/Direct rpm** menu is set to **Off**.

> If the **On/Off Control** in the **CSS Settings** menu is set to **External Switch**, the **CSS** or **rpm** operation cannot be controlled by soft key. The soft key will show the current state, but pressing it will have no effect.

The DAC output to the spindle inverter drive is an open loop signal. The system does not monitor the actual spindle speed. The output signal is based solely on the inverter's speed input versus the input voltage profile.

Activating the DAC output

After selecting the operating **Mode** and entering its parameters in the **CSS/Direct rpm** menu, the DAC output must be enabled to begin controlling the spindle.

To activate the DAC output:

- ▶ Depending on the operating mode selected, press the **rpm On/Off** or the **CSS On/Off** soft key to **On** to enable the DAC output
- > If **CSS** is active, the **CSS** icon appears next to the X-axis display

> If the entered surface speed or rpm cannot be maintained because the speed is outside the range for the current gear or outside the limits from the **CSS/Direct rpm** form, an arrow will appear after the **CSS** icon (CSS↑ or CSS↓). The direction of the arrow indicates whether the speed is at the upper or lower limit.

- ▶ Press the **Speed +** or the **Speed -** to increase or decrease the current surface speed or spindle speed
- > The value is increased or decreased by 5% each time the soft key is pressed

14.5.1 Connecting the IOB to the inverter of a lathe

Turning Application 1 - Automatic CSS/POT Control

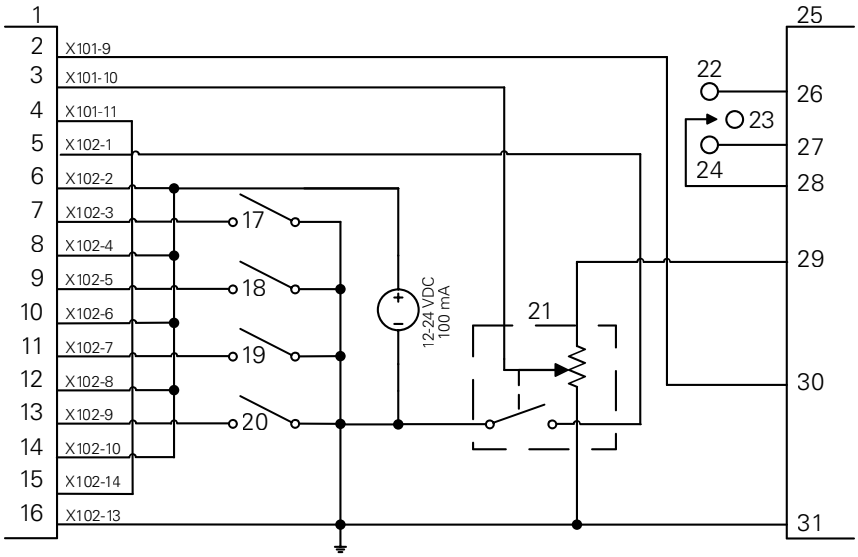

Example of gear detection and switching to manual spindle speed control

1 CSS I/O
2 Out 789
3 Out 7
4 Out 8
5 In 1-
6 In 1+
7 In 2-
8 In 2+
9 In 3-
10 In 3+
11 In 4-
12 In 4+
13 In 5-
14 In 5+
15 DAC Out
16 GND
17 Gear 1
18 Gear 2
19 Gear 3
20 Gear 4
21 Manual RPM
22 FWD
23 OFF
24 REV
25 Inverter
26 Forward
27 Reverse
28 Input + Common
29 Analog Supply
30 Analog Input
31 Analog Common

Turning Application 2 - Manual CSS/POT Control

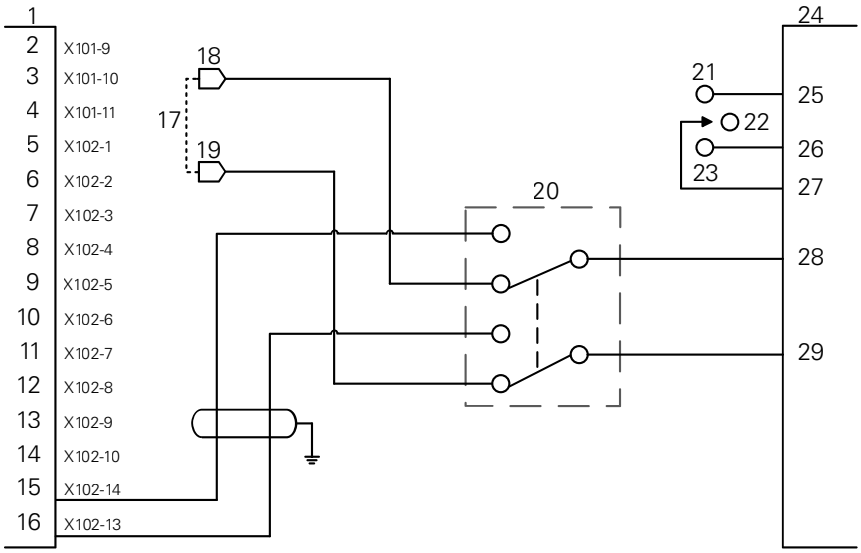

Example of switching to manual spindle speed control

1 CSS I/O
2 Out 789
3 Out 7
4 Out 8
5 In 1-
6 In 1+
7 In 2-
8 In 2+
9 In 3-
10 In 3+
11 In 4-
12 In 4+
13 In 5-
14 In 5+
15 DAC Out
16 GND
17 Machine POT
18 V ref+
19 V ref-
20 CSS/POT Selector
21 FWD
22 OFF
23 REV
24 Inverter
25 Forward
26 Reverse
27 Input + Common
28 Analog Input
29 Analog Common

14.6 Diagnostics

When the IOB 610 is connected to the DRO 300, the **Diagnostics** menu under **Installation Setup** provides further diagnostic possibilities. The information available varies depending on the configuration of the system, switching I/O, and the spindle or **CSS** functions.

To access the **Diagnostics** menu:

- Press the **Setup** soft key
- Select **Installation Setup**
- Select **Diagnostics**
- Press the **enter** key to display the **Diagnostics** menu

> When **Spindle Speed** control is activated, the **Diagnostics** menu for spindle control will be displayed

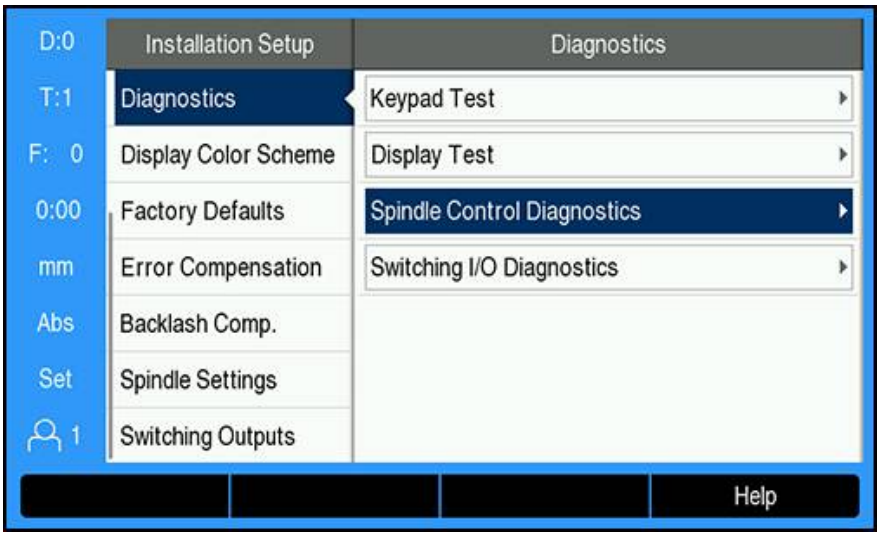

or

> When **CSS** is activated, the **Diagnostics** menu for **CSS** will be displayed

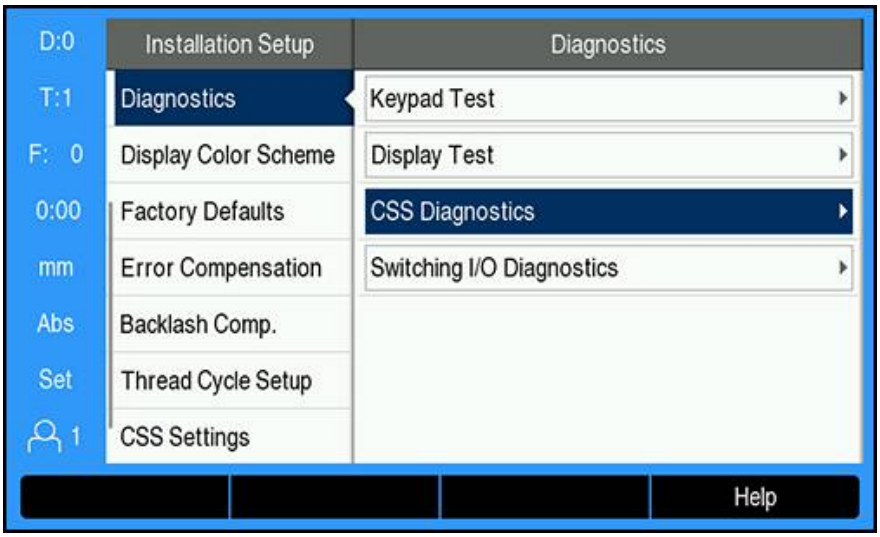

Accessing Spindle Control Diagnostics

- Select **Spindle Control Diagnostics** in the **Diagnostics** menu
- Press the **enter** key to display **Spindle Control Diagnostics**:

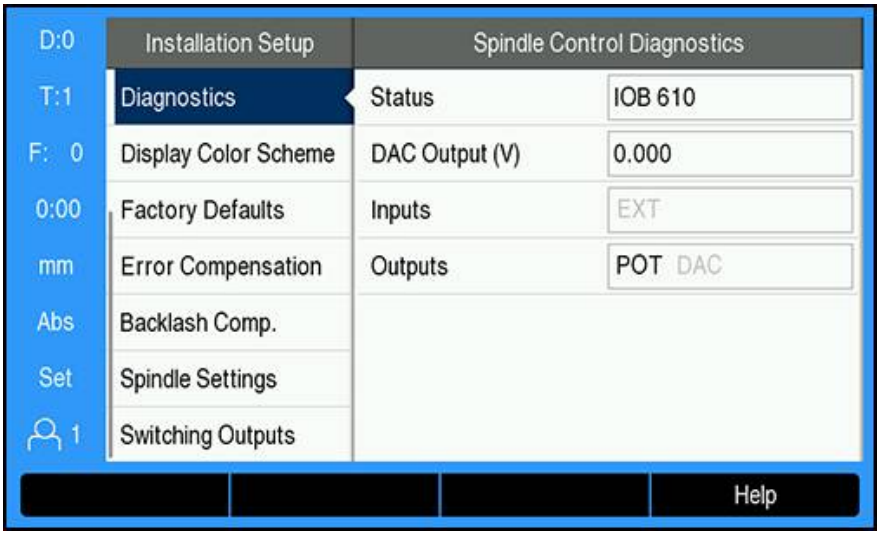

- **Status**: shows the state of the bus communication between the DRO and the IOB. If the field shows **Not Present** there is no communication with the IOB.
- **DAC Output (V)**: shows the current value of the transmitted voltage. The value is between - 10 V and + 10 V at connector X101, pin 11.
- **Inputs**: shows the current state of the inputs
- **Outputs**: shows the current state of the relay outputs

i	All currently active input and output relays are shown in black and currently inactive are shown in gray.

Accessing CSS Diagnostics

- Select **CSS Diagnostics** in the **Diagnostics** menu
- Press the **enter** key to display **CSS Diagnostics**:

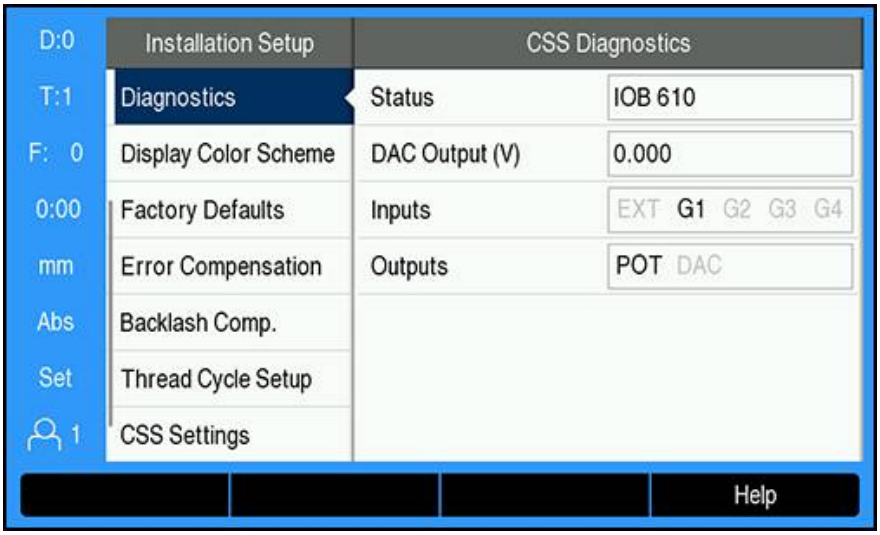

- **Status**: shows the state of the bus communication between the DRO and the IOB. If the field shows **Not Present** there is no communication with the IOB.
- **DAC Output (V)**: shows the current value of the transmitted voltage. The value is between - 10 V and + 10 V at connector X101, pin 11.
- **Inputs**: shows the current state of the inputs
- **Outputs**: shows the current state of the relay outputs

Accessing Switching I/O Diagnostics

- Select **Switching I/O Diagnostics** in the **Diagnostics** menu
- Press the **enter** key to display **Switching I/O Diagnostics**:

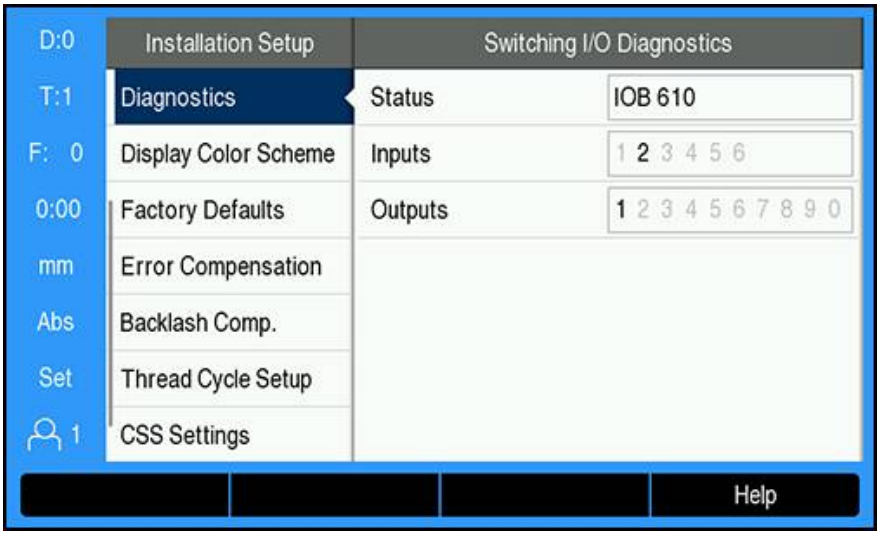

- **Status**: shows the state of the bus communication between the position display unit and the IOB 610. If the field shows **Not Present** there is no communication with the IOB.
- **Inputs**: shows the current state of the inputs
- **Outputs**: shows the current state of the relay outputs

The states of the inputs and relay outputs have the following meanings:

Inputs	Meaning	Connector	Pins
EXT (spindle only)	External switch is active	X102	1, 2
G1	Switch for gear 1 is active	X102	3, 4
G2	Switch for gear 2 is active	X102	5, 6
G3	Switch for gear 3 is active	X102	7, 8
G4	Switch for gear 4 is active	X102	9, 10
EST (**Limited** mode only)	E-Stop input is active	X102	3, 4
GC (**Limited** mode only)	Gear change is active	X102	5, 6
SPS (**Limited** mode only)	Spindle stop is active	X102	7, 8

Outputs	Meaning	Connector	Pin
POT	Potentiometer relay is active	X101	10
DAC	DAC output relay is active	X101	11

15

Setting up the IB 2X

15.1 Overview

This feature is available on DRO 300 products only.

The IB 2X external unit provides two additional encoder connections when connected to a compatible digital readout.

15.2 Setup

Connecting to the DRO

- ▶ Connect the IB 2X to a DRO 300 product
- > The DRO will automatically recognize when the IB 2X is connected

Further information: "Connecting an accessory", Page 41

Configuring the DRO

Encoders connected to the additional connections provided by the IB 2X need to be set up in the following menus:

- **Encoder Setup**
- **Display Configuration**
- **DRO View Settings**

Encoder Setup

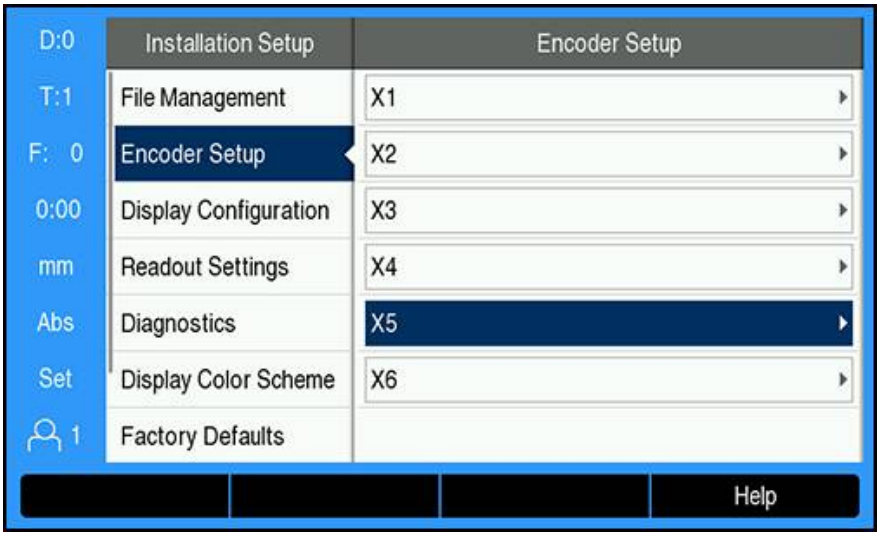

The two additional encoder connections provided by the IB 2X will display as **X5** and **X6** in the **Encoder Setup** menu regardless of how many encoder connections are available on the DRO.

The two additional encoder connections are displayed in the **Encoder Setup** menu.

Further information: "Encoder Setup", Page 76

Display Configuration

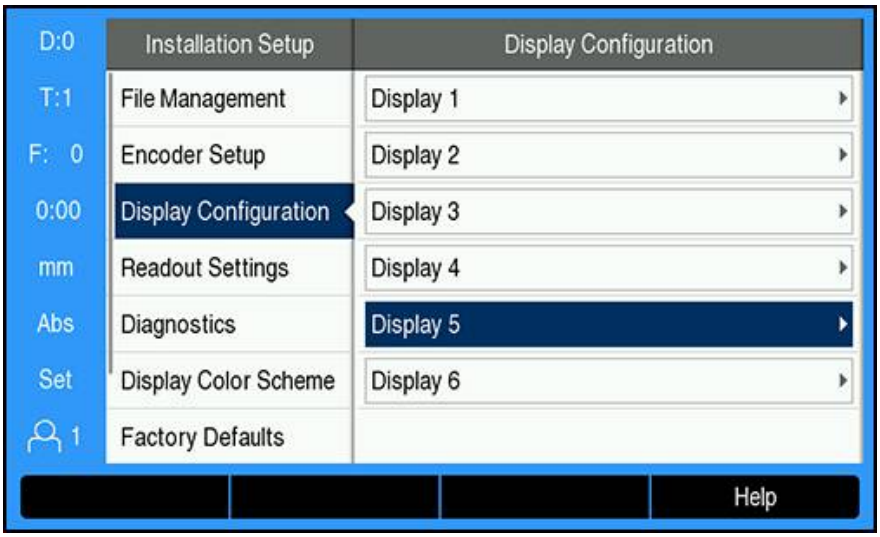

Two additional displays are available in the **Display Configuration** menu.
Further information: "Display Configuration", Page 78

DRO View Settings

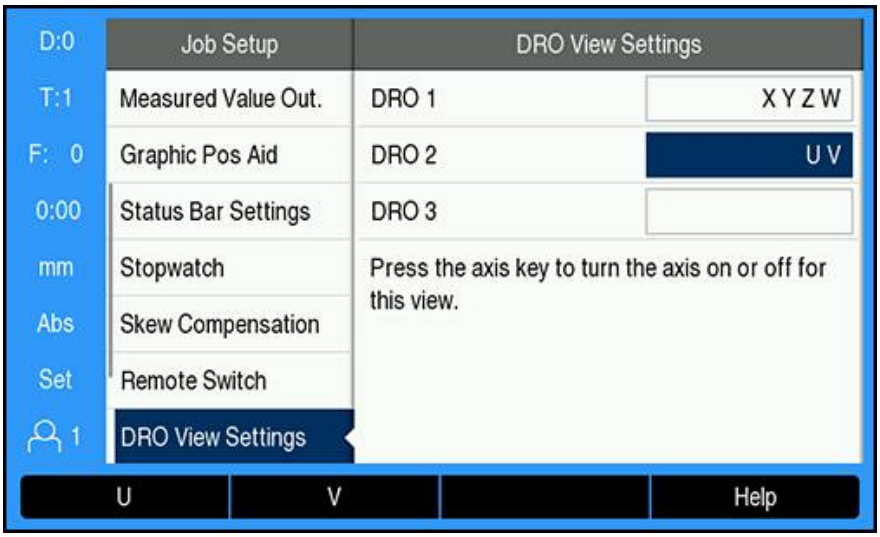

The maximum number of axes able to be shown on a single DRO View is limited to the **Number of Axes** selected in the **Readout Settings** menu.

Further information: "Readout Settings", Page 79

To add an IB 2X connected encoder to a DRO View:

- Press the **Setup** soft key
- Open in the sequence
  - **Job Setup**
  - **DRO View Settings**
- Highlight the **DRO** view field you would like to configure
  - **DRO 1**
  - **DRO 2**
  - **DRO 3**
- Press the soft key associated with the **Label** for the axis you want to add to the selected view. If a soft key is pressed for an axis that is already included, the axis will be removed.
- Repeat the last two steps for all views you would like to configure
- Press the **enter** key to save the **DRO View Settings** parameter changes and return to the **Job Setup** menu

or

- Press the **C** key to cancel

Further information: "DRO View Settings", Page 94

16

Settings

16.1 Overview

This chapter describes the settings options and the associated parameters for the product.

The basic settings options and parameters for commissioning are outlined in the respective chapter:

Further information: "Commissioning", Page 67

Function	Description
Job Setup	Set the individual job properties
Installation Setup	Set the installation setup properties

Activation

- Press the **Setup** soft key

16.2 Factory default settings

If individual settings that were changed during commissioning need to be reset to the default setting, you can look up the default for each adjustment parameter in this chapter.

If all settings need to be reset, you can restore the product to the default settings.

16.3 Job Setup

16.3.1 Units

Units settings are used to set the working units of measure for linear and angular dimensions.

Parameter	Explanation
Linear	The unit of measure used for linear measurements ■ **inch** or **mm** ■ Default setting: **mm**
Angular	The unit of measure used for angular measurements ■ **Decimal Degrees**, **Radians**, **DMS** ■ Default setting: **Decimal Degrees**

16.3.2 Scale Factor

Scale Factor is used to scale a part up or down.

Parameter	Explanation
Any assigned display label ex. **X, Y,** or **Z**	■ **Off** or **On** ■ Default setting: **Off**

16.3.3 Edge Finder

Edge Finder settings are used set the **Diameter**, **Length Offset**, and the working unit of measure for the connected **Edge Finder**. Available on DRO 300 products only.

Parameter	Explanation
Diameter	Set the **Edge Finder Diameter**
Length Offset	Set the **Edge Finder Length Offset**
Units	The unit of measure used for the **Diameter** and **Length Offset** settings ■ Settings: **inch** or **mm** ■ Default setting: **mm**

16.3.4 Diameter Axes

Diameter Axes settings are used to set which display positions can be displayed as diameter values.

Parameter	Explanation
Any assigned display label ex. **X, Y,** or **Z**	■ **Off** or **On** ■ Default setting: **Off**

16.3.5 Measured value out.

The **Measured value out.** setting is used to enable or disable the output of measurement data when a probe operation is complete. Available on DRO 300 products only.

Parameter	Explanation
Data Output Probing	■ **Off** or **On** ■ Default setting: **Off**

16.3.6 Graphic Pos Aid

Graphic Pos Aid settings are used to turn the graphic positioning display on or off, and set it's range.

Parameter	Explanation
Any assigned display label ex. **X, Y,** or **Z**	Turn the graphic positioning display on or off ■ **Off**, **On**, or enter a range ■ Default range setting: **5.000** mm

16.3.7 Status Bar Settings

Status Bar Settings are used to select which features are displayed in the Status Bar.

Parameter	Explanation
Datum	■ **Off** or **On** ■ Default setting: **On**
Tool	■ **Off** or **On** ■ Default setting: **On**
Feed Rate	■ **Off** or **On** ■ Default setting: **On**
Stop Watch	■ **Off** or **On** ■ Default setting: **On**
Current User	■ **Off** or **On** ■ Default setting: **On**

16.3.8 Stopwatch

Stopwatch settings are used to operate the **Stopwatch**.

Parameter	Explanation
Status	Displays the current state ■ Settings: **Stopped** or **Running** ■ Default setting: **Stopped**
Elapsed Time	Displays the elapsed time that the stopwatch has been running ■ Default setting: **00:00:00**

16.3.9 Skew Compensation (milling applications only)

Skew Compensation settings are used enable and set a skew angle for a workpiece. Available on DRO 300 products only.

Parameter	Explanation
Status	Enable or disable the **Skew Compensation** feature ■ **Off** or **On** ■ Default setting: **Off**
Angle	Set the skew **Angle** if known or use the **Teach** function.

16.3.10 Remote Switch

The **Remote Switch** settings are used to set the functions that will be performed when the **Remote Switch** is closed. Available on DRO 300 products only.

Parameter	Explanation
Data Output	Enable or disable the output of the current position to the USB mass storage device ■ **Off** or **On** ■ Default setting: **Off**
Zero	Enable or disable zeroing of axis display positions ■ Settings: Any assigned axis label. More than one axis can be selected. ■ Default setting: none
Next	Enable or disable moving to the next hole in a hole pattern, or next step in a program ■ **Off** or **On** ■ Default setting: **Off**

16.3.11 DRO View Settings

DRO View Settings are used to set the axes that are displayed in each of the three DRO views. Available on DRO 300 products only.

Parameter	Explanation
DRO 1	■ Settings: Any assigned axis label. More than one axis can be selected. ■ Default setting: Varies based on number of axes
DRO 2, **DRO 3**	■ Settings: Any assigned axis label. More than one axis can be selected. ■ Default setting: none

16.3.12 Display Settings

Display Settings are used to adjust the appearance of the display.

Parameter	Explanation
Brightness	Set the brightness of the display ■ Setting range: **10 % ... 100 %** ■ Default setting: **90 %**
Display Saver (min)	Set how long the display can remain inactive, in minutes, before the display saver turns on ■ Settings: **Off, 10, 30** ■ Default setting: **30**
Color Mode	Set the color mode for varying ambient lighting conditions ■ Settings: **Night** or **Day** ■ Default setting: **Day**
Axes Displays	Set how the axis that is in motion is displayed ■ **Off** ■ **Dynamic Zoom**: The axis currently in motion is magnified on the display ■ **Highlight**: The axis currently in motion is highlighted on the display. All other axes are grayed out. ■ Default setting: **Off**

16.3.13 Vectoring

Vectoring settings are used to enable and configure the **Vectoring** feature.

Parameter	Explanation
Status	Enable or disable the **Vectoring** feature ■ **Off** or **On** ■ Default setting: **Off**
Angle	Set the angle between the longitudinal slide and the top slide ■ Setting range: **0° - 360°**

16.3.14 Language

The **Language** setting is used to select the language used for the user interface.

Parameter	Explanation
Language	■ Settings: multiple languages ■ Default setting: **English**

16.4 Installation Setup

16.4.1 File Management

File Management options are used to import, export, and install files on the product.

Parameter	Explanation
Configuration Parameters	Import or export a **Configuration Parameters** file ■ Options: **Import** or **Export**
Segmented LEC Table	Import or export a **Segmented LEC Table** file ■ Options: **Import** or **Export**
Tool Table	Import or export a **Tool Table** file ■ Options: **Import** or **Export**
Current Program	Import or export a the **Current Program** file. Available on DRO 300 products only. ■ Options: **Import** or **Export**
Operating Instructions	Install an **Operating Instructions** file ■ Options: **Load**
Power-up Screen	Install a **Power-up Screen** file ■ Options: **Load**
Product Software	Install a **Product Software** file ■ Options: **Install**

16.4.2 Encoder Setup

Encoder settings are used to configure parameters for each encoder.

Parameter	Explanation
Encoder Type	■ Settings: **Linear**, **Rotary**, or **Rotary (Linear)** ■ Default setting: **Linear**
Resolution	■ Settings: varies based on **Encoder Type**
Reference Mark	■ Settings: **None**, **Single**, **Position Trac**, **P-Trac (ENC 250)**, **EverTrack** ■ Default setting: varies based on **Encoder Type**
Count Direction	■ Settings: **Negative** or **Positive** ■ Default setting: **Positive**
Error Monitor	■ **Off** or **On** ■ Default setting: **On**

16.4.3 Display Configuration

Display settings are used to configure the resolution, labels, and inputs shown on the display.

Parameter	Explanation
Display Resolution	Settings vary based on encoder connected to the product
Label	■ Settings: **Off, X, Y, Z, U, V, W, A, B, C, S** ■ Default Setting: ■ **Display 1: X** ■ **Display 2: Y** ■ **Display 3: Z** ■ **Display 4: W**
Subscript	■ Settings: **Off** or **On** ■ Default Setting: **Off**
Input 1	■ Settings: **X1, X2, X3, X4** ■ Default Setting: ■ **Display 1: X1** ■ **Display 2: X2** ■ **Display 3: X3** ■ **Display 4: X4**
Couple Operation	■ Settings: **+, -, Off** ■ Default Setting: **Off**
Input 2	■ Settings: **Not Defined, X1, X2, X3, X4** ■ Default Setting: **Not Defined**

16.4.4 Readout Settings

Readout Settings are used to configure the **Application**, **Number of Axes**, and **Position Recall**.

Parameter	Explanation
Application	■ Settings: **Mill** or **Turn** ■ Default Setting: **Mill**
Number of Axes	■ Settings: **1, 2, 3, 4** ■ Default Setting: **4**
Position Recall	■ Settings: **Off** or **On** ■ Default Setting: **Off**

16.4.5 Diagnostics

Diagnostics are used to test the keypad and the display.

Further information: "Diagnostics", Page 80

16.4.6 Display Color Scheme

The **Display Color Scheme** settings are used to select the **Color Mode** of the display and to set whether users can select the **Color Mode**.

Parameter	Explanation
Color Mode	■ Settings: **Day**, **Night**, **User Selectable** ■ Default Setting: **User Selectable**

16.4.7 Factory Defaults

The **Factory Defaults** option is used to reset **Job Setup** and **Installation Setup** parameters to the default settings.

Parameter	Explanation
Reset Settings	■ Settings: **No** or **Yes** ■ Default Setting: **No**

16.4.8 Error Compensation

Error Compensation provides a way to configure Linear, or Segmented Linear Error Compensation for each encoder.

Parameter	Explanation
X1, X2, X3, X4	Settings: **Off**, **Linear**, **Segmented** Default setting: **Off**

16.4.9 Backlash compensation

Backlash Comp. is used to activate backlash compensation for rotary encoders.

Parameter	Explanation
X1, X2, X3, X4	■ Settings: **Off**, **On** ■ Default setting: **Off**

16.4.10 Spindle Settings

Spindle Settings settings are used to set the DAC output range and offset voltage for the spindle. Available in the **Mill** application on DRO 300 products connected to an IOB 610 only.

Parameter	Explanation
Status	Enable or disable the spindle (rpm) functionality ■ Settings: **Enabled** or **Disabled** ■ Default setting: **Disabled**
rpm Source	Select if the speed (rpm) is determined from a rotary encoder or calculated internally ■ Settings: **Encoder** or **Calculated** ■ Default setting: **Encoder**
Voltage Offset	Enter a voltage offset value ■ Range: **-0.200 V ... +0.200 V** ■ Default setting: **0.000**
Min Voltage (Low)	Enter the minimum spindle output voltage for the low gear ■ Default setting: **0**
Max Voltage (Low)	Enter the maximum spindle output voltage for the low gear ■ Default setting: **10**
Min Voltage (High)	Enter the minimum spindle output voltage for the high gear ■ Default setting: **0**
Max Voltage (High)	Enter the maximum spindle output voltage for the high gear ■ Default setting: **10**
0V - rpm (Low)	Enter the expected speed (rpm) for the low gear at 0 V ■ Default setting: **0**
10V - rpm (Low)	Enter the expected speed (rpm) for the low gear at 10 V ■ Default setting: **9999**
0V - rpm (High)	Enter the expected speed (rpm) for the high gear at 0 V ■ Default setting: **0**
10V - rpm (High)	Enter the expected speed (rpm) for the high gear at 10 V ■ Default setting: **9999**
Min Run rpm (Low)	Enter the minimum speed (rpm) allowed while running in the low gear ■ Default setting: **0**
Max Run rpm (Low)	Enter the maximum speed (rpm) allowed while running in the low gear ■ Default setting: **9999**

Parameter	Explanation
Min Run rpm (High)	Enter the minimum speed (rpm) allowed while running in the high gear ■ Default setting: **0**
Max Run rpm (High)	Enter the maximum speed (rpm) allowed while running in the high gear ■ Default setting: **9999**

16.4.11 CSS Settings

CSS Settings are used to configure spindle control. Available in the **Turn** application on DRO 300 products connected to an IOB 610 only.

Parameter	Explanation
Status	Enable or disable the CSS (Constant Surface Speed) function ■ Settings: **Enabled** or **Disabled** ■ Default setting: **Disabled**
Type	Select a manual speed limit settings **Type** ■ Settings: **Standard** or **Limited** ■ Default setting: **Standard**
On/Off Control	Select how the CSS mode is controlled ■ Settings: **Soft Key** or **External Signal** ■ Default setting: **Soft Key**
Gear Select	Select how to control gear selection ■ Settings: **Manual** or **External Switch** ■ Default setting: **Manual**
Gear 1: rpm at 0V	Enter the spindle speed (rpm) for gear 1 when the output is at 0V ■ Default setting: **0**
Gear 1: rpm at 10V	Enter the spindle speed (rpm) for gear 1 when the output is at 10V ■ Default setting: **9999**
Gear 2: rpm at 0V	Enter the spindle speed (rpm) for gear 2 when the output is at 0V ■ Default setting: **0**
Gear 2: rpm at 10V	Enter the spindle speed (rpm) for gear 2 when the output is at 10V ■ Default setting: **9999**
Gear 3: rpm at 0V	Enter the spindle speed (rpm) for gear 3 when the output is at 0V ■ Default setting: **0**
Gear 3: rpm at 10V	Enter the spindle speed (rpm) for gear 3 when the output is at 10V ■ Default setting: **9999**
Gear 4: rpm at 0V	Enter the spindle speed (rpm) for gear 4 when the output is at 0V ■ Default setting: **0**
Gear 4: rpm at 10V	Enter the spindle speed (rpm) for gear 4 when the output is at 10V ■ Default setting: **9999**
Voltage Offset	Enter a voltage offset value ■ Range: **-0.200 V ... +0.200 V** ■ Default setting: **0.000**

16.4.12 Switching Outputs

The **Switching Outputs** settings are used to set the axis position conditions for the switching output relays. Available on DRO 300 products connected to an IOB 610 only.

Parameter	Explanation
Axis	Select an axis for the output ■ Settings: Any assigned axis label ■ Default setting: **X**
Condition	Select the required **Condition** for activating the output ■ Settings: **<**, **<=**, **>=**, **>**, or **Off** ■ Default setting: **Off**
Switch Point	Enter the **Switch Point** value and select the position type ■ Default **Switch Point** value: **0.000** ■ Default position type: **Abs**
Type	Select whether the **Condition** refers to a **Point** on the axis or refers to a **Range** about zero ■ Settings: **Point** or **Range** ■ Default setting: **Point**
Relay Output	Select the relay operation that is performed when the **Condition** is met ■ Settings: **On** or **Off** ■ Default setting: **On**
Relay Mode	Select the **Relay Mode** ■ Settings: **Continuous** or **Pulse** ■ Default setting: **Continuous**

17

Service and maintenance

17.1 Overview

This chapter describes the general maintenance work on the product:

This chapter contains a description of maintenance work for the product only.
Further Information: Manufacturer's documentation for the respective peripheral devices

17.2 Cleaning

NOTICE

Cleaning with sharp-edged objects or aggressive cleaning agents

Improper cleaning will cause damage to the product.

- Never use abrasive or aggressive cleaners, and never use strong detergents or solvents
- Do not use sharp-edged objects to remove persistent contamination

- Use only a cloth dampened with water and a mild detergent for cleaning the exterior surfaces
- Use a lint-free cloth and a commercially available glass cleaner to clean the screen

17.3 Maintenance schedule

The product is largely maintenance-free.

NOTICE

Operating defective products

Operating defective products may result in serious consequential damage.

- Do not operate or repair the product if damaged
- Replace defective products immediately or contact an authorized service agency

The following steps are only to be performed by electrical specialists.
Further information: "Personnel qualification", Page 23

Personnel requirement

Maintenance step	Interval	Corrective action
▶ Check all labels and symbols provided on the product for readability	Annually	▶ Contact an authorized service agency
▶ Inspect electrical connections for damage and check their function	Annually	▶ Replace defective cables. Contact an authorized service agency if required.
▶ Check power cables for faulty insulation and weak points	Annually	▶ Replace power cables according to the specification

17.4 Resuming operation

When operation is resumed, e.g. when the product is reinstalled after repair or when it is remounted, the same measures and personnel requirements apply as for mounting and installing the product.

Further information: "Mounting", Page 31

Further information: "Installation", Page 37

When connecting the peripheral devices (e.g. encoders), the operating company must ensure safe resumption of operation and assign authorized and appropriately qualified personnel to the task.

Further information: "Obligations of the operating company", Page 24

17.5 Resetting to the factory defaults

You can reset the settings of the product to the factory defaults, if required.

- ▶ Press the **Setup** soft key
- ▶ Use the arrow keys to select the sequence
  - **Installation Setup**
  - **Factory Defaults**
  - **Reset Settings**
  - **Yes**
- ▶ Press the **enter** key

18

What to do if...

18.1 Overview

This chapter describes the causes of faults or malfunctions of the product and the appropriate corrective actions.

Make sure that you have read and understood the "Basic Operation" chapter before performing the activities described in this section.

Further information: "Basic operation", Page 53

18.2 Malfunctions

If faults or malfunctions that are not listed in the "Troubleshooting" table below occur during operation, refer to the machine tool builder's documentation or contact an authorized service agency.

18.3 Troubleshooting

The following troubleshooting steps must be performed only by the personnel indicated in the table.

Further information: "Personnel qualification", Page 23

Fault	Cause of fault	Correction of fault	Personnel
Status LED remains dark after switch-on.	There is no supply voltage	▶ Check the power cable	Electrical specialist
	The product does not function properly	▶ Contact an authorized service agency	Qualified personnel
The position display does not count the axis position even though the encoder is moving.	Incorrect connection of the encoder	▶ Correct the connection ▶ Contact the encoder manufacturer's service agency	Qualified personnel
The position display miscounts the axis position.	Incorrect settings of the encoder	▶ Check the encoder settings	Qualified personnel
The connected USB mass storage device is not detected.	Defective connection	▶ Check the correct position of the USB mass storage device in the port	Qualified personnel
	The type or formatting of the USB mass storage device is not supported	▶ Use another USB mass storage device	Qualified personnel

19

Removal and disposal

19.1 Overview

This chapter provides information about the removal and disposal of the product. This information includes requirements to be complied with in respect of environmental-protection laws.

19.2 Removal

Removal of the product is to be performed only by qualified personnel.
Further information: "Personnel qualification", Page 23

Depending on the connected peripherals, the removal may need to be performed by an electrical specialist.

In addition, the same safety precautions that apply to the mounting and installation of the respective components must be taken.

Removing the product

To remove the product, follow the installation and mounting steps in the reverse order.

Further information: "Installation", Page 37

Further information: "Mounting", Page 31

19.3 Disposal

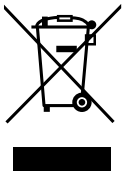

NOTICE

Incorrect disposal of the product!

Incorrect disposal of the product can cause environmental damage.

- Do not dispose of electrical waste and electronic components in domestic waste
- The integrated backup battery must be disposed of separately from the product
- Forward the product and the backup battery to recycling in accordance with the applicable local disposal regulations

- If you have any questions about the disposal of the product, please contact a HEIDENHAIN service agency

20

Specifications

20.1 Product specifications

Product	
Housing	Die cast aluminum
Housing dimensions	285 mm x 180 mm x 46 mm
Fastener system, mating dimensions	VESA MIS-D, 100 100 mm x 100 mm

Display	
Visual display unit	■ LCD Widescreen (15:9) color screen 17.8 cm (7") ■ 800 x 480 pixels
User interface	Graphical user interface (GUI) with keypad

Electrical data	
Power supply	■ AC 100 V ... 240 V (±10 %) ■ 50 Hz ... 60 Hz (±5 %) ■ Input power max. 30 W
Buffer battery	Lithium battery type CR2032; 3.0 V
Overvoltage category	II
Number of encoder inputs	3 or 4
Encoder interfaces	TTL: Max. current 300 mA max. input frequency 500 kHz
KT 130, IOB 610, IB 2X interface	DC 5 V (±5 %)
Data interface	USB 2.0 Hi-Speed (Type C), max. current 500 mA

Ambient conditions	
Operating temperature	0 °C ... 45 °C
Storage temperature	-20 °C ... 70 °C
Relative air humidity	40 % ... 80 % r.H., non-condensing
Altitude	≤ 2000 m

General information	
Directives	■ EMC Directive 2014/30/EU ■ Low Voltage Directive 2014/35/EU
Pollution degree	2
Protection EN 60529	■ Front panel and side panels: IP 54 ■ Rear panel: IP 40

General information	
Mass	■ 1.9 kg ■ With Single-Pos stand: 2.0 kg ■ With Multi-Pos holder: 2.3 kg ■ With Mounting frame: 3.3 kg

20.2 Product dimensions and mating dimensions

All dimensions in the drawings are in millimeters.

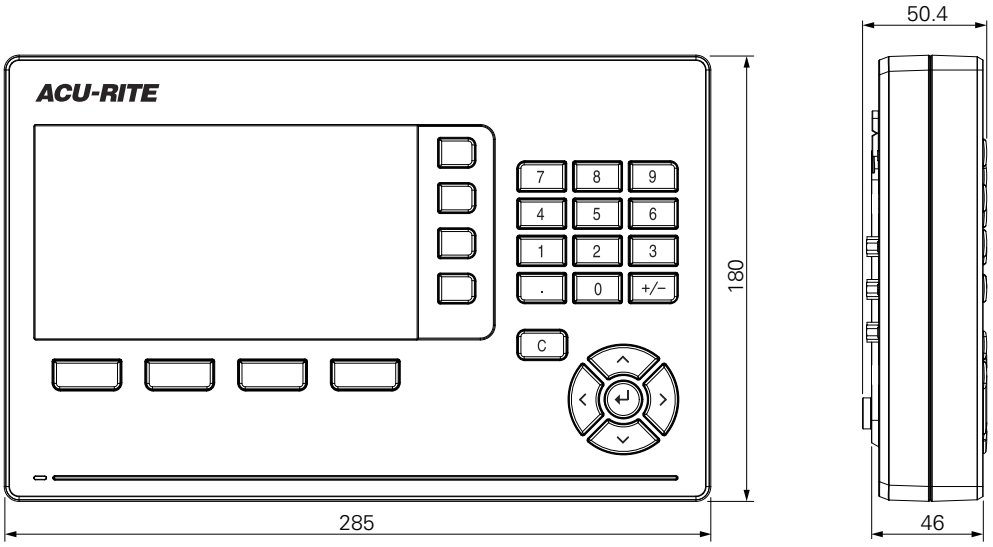

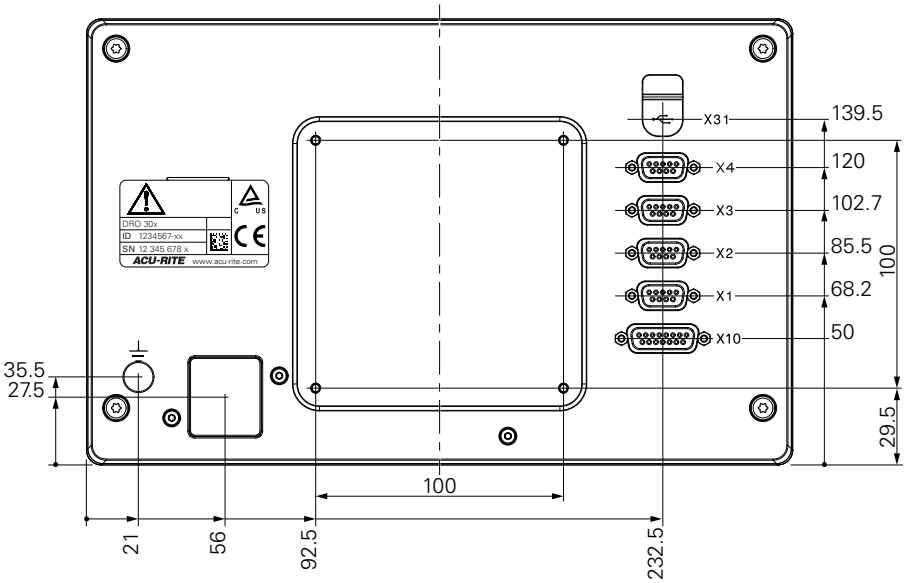

Product dimensions with Single-Pos stand

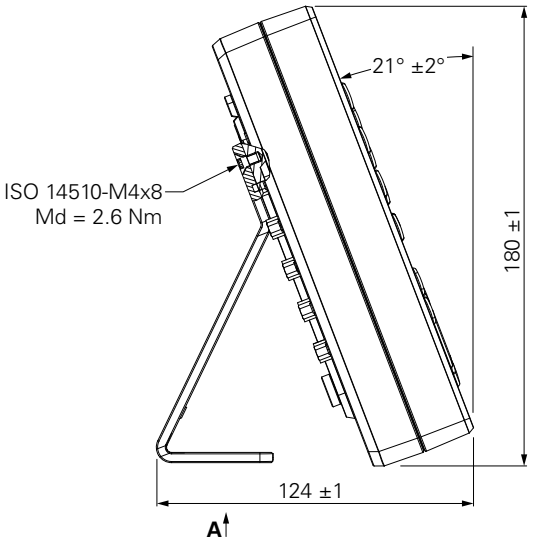

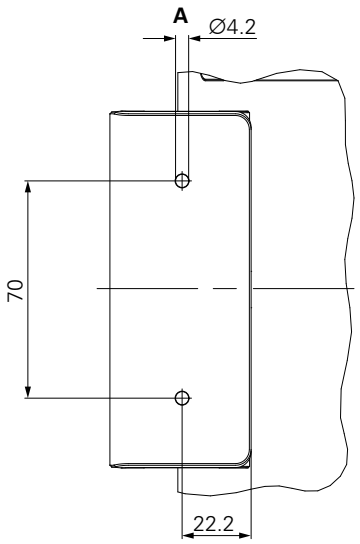

Product dimensions with Multi-Pos holder

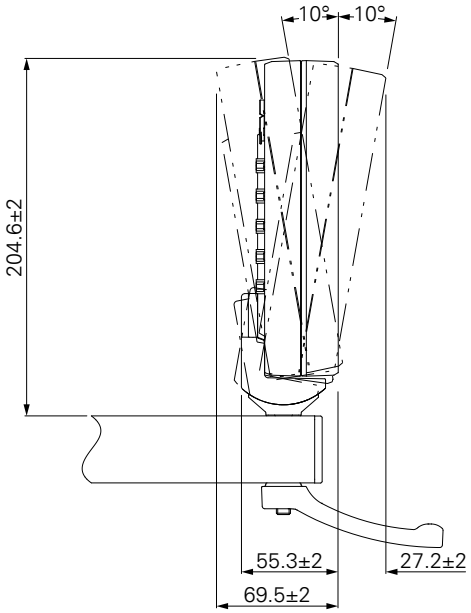

Product dimensions with mounting frame

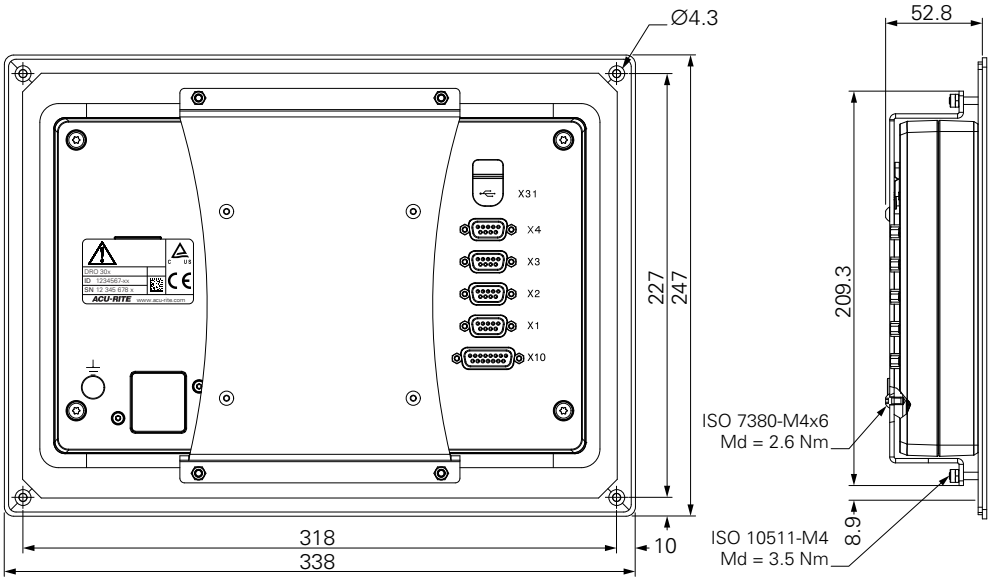

HEIDENHAIN CORPORATION

333 East State Parkway
Schaumburg, IL 60173-5337 USA
☏ +1 (847) 490-1191
FAX +1 (847) 490-3931
E-Mail: info@heidenhain.com

www.heidenhain.com

Original document
1221048-22 · Ver02 · 10/2018